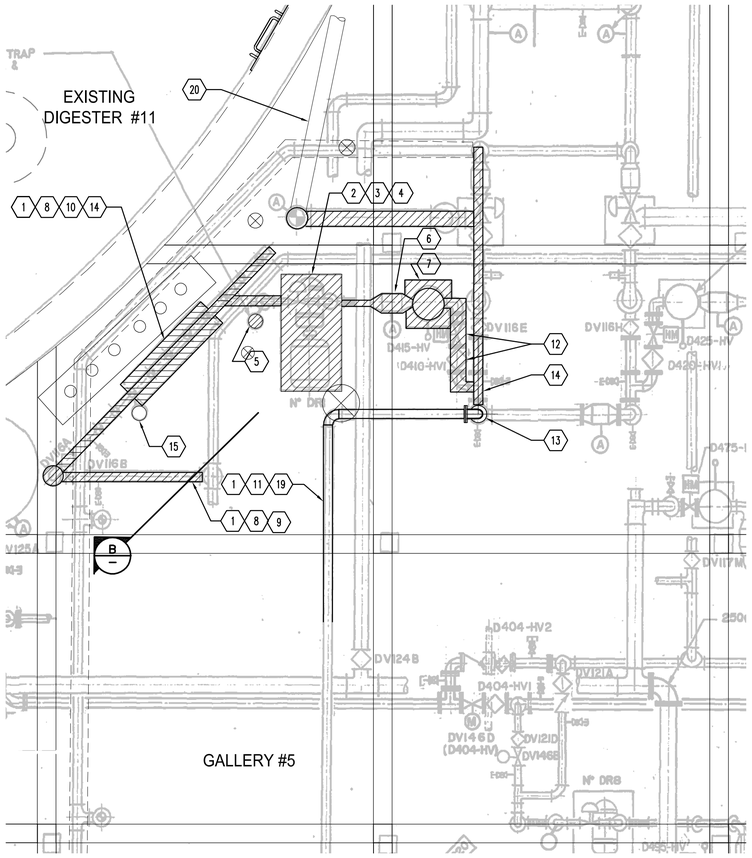

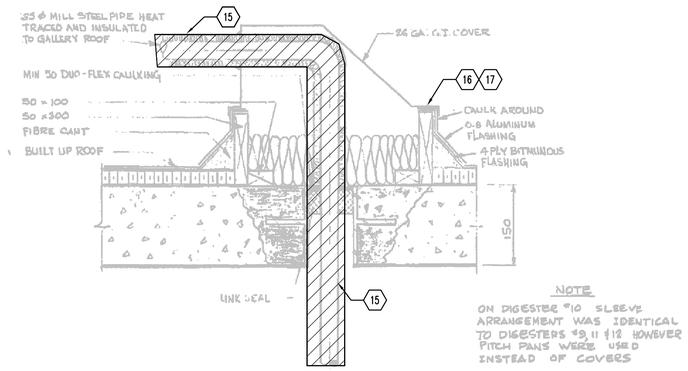

NOTE
ON DIGESTER #10 SLEEVE ARRANGEMENT WAS IDENTICAL TO DIGESTERS #9, 11 & 12 HOWEVER PITCH PANS WERE USED INSTEAD OF COVERS

2 – EXISTING SLEEVE FOR GAS PIPING THROUGH GALLERY ROOF
N.T.S.

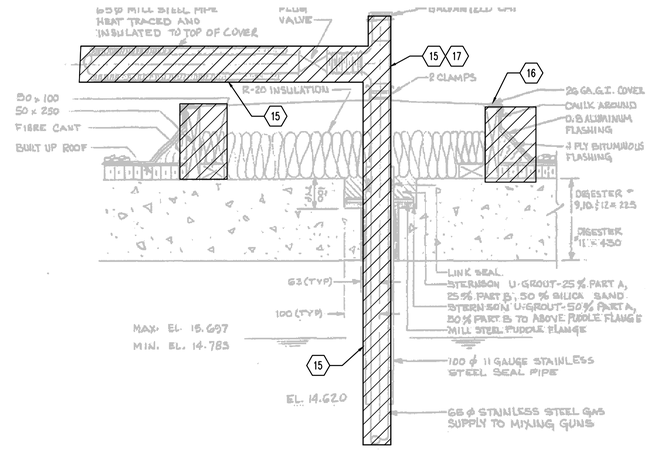

3 – EXISTING SLEEVE FOR GAS PIPING THROUGH DIGESTER ROOF
N.T.S.

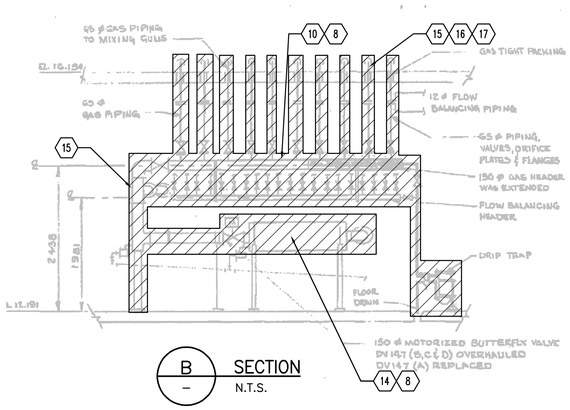

B – SECTION
N.T.S.

NOTES:

1. DEMOLISH AND REMOVE EXISTING DIGESTER 11 GAS PIPING. THE ENTIRE GAS PIPING SYSTEM SHALL BE PURGED OF METHANE GAS USING CARBON DIOXIDE OR NITROGEN GAS PRIOR TO DEMOLITION. ABIDE BY CANADIAN STANDARDS ASSOCIATION (CSA) STANDARD CSA B149.1-10 'NATURAL GAS AND PROPANE INSTALLATION CODE', CLAUSE 6.23 PURGING OF PIPING AND TUBING SYSTEMS AND HOSE AFTER LEAK TESTING AND CLAUSE 6.24 PURGING GAS FROM A PIPING OR TUBING SYSTEM.
2. DISCONNECT POWER, CONTROLS, AND GAS PIPING TO AND FROM THE FULLER GAS COMPRESSOR AND MOTOR. REMOVE AND SALVAGE GAS COMPRESSOR AND MOTOR INCLUDING MOUNTING HARDWARE. TURN OVER GAS COMPRESSOR AND MOTOR INCLUDING MOUNTING HARDWARE TO NORTH END WATER POLLUTION CONTROL CENTRE (NEWPCC) AND TRANSPORT SALVAGED MATERIALS TO A DESIGNATED ON-SITE LOCATION. DEMOLISH COMPRESSOR CONCRETE BASE AND VIBRATION ISOLATION.
3. DISCONNECT AND SALVAGE THE 50 MM DIAMETER FISHER DIFFERENTIAL PRESSURE RELIEF VALVE ON COMPRESSOR BY-PASS. TURN OVER THE DIFFERENTIAL PRESSURE RELIEF VALVE TO NEWPCC AND TRANSPORT SALVAGED MATERIALS TO A DESIGNATED ON-SITE LOCATION.
4. DISCONNECT AND SALVAGE THE 100 MM DIAMETER MANUAL PLUG VALVE ON COMPRESSOR BY-PASS. TURNOVER THE MANUAL PLUG VALVE TO NEWPCC AND TRANSPORT SALVAGED MATERIALS TO A DESIGNATED ON-SITE LOCATION.
5. DISCONNECT AND SALVAGE THE HIGH PRESSURE DRIP TRAP ON THE GAS COMPRESSOR DISCHARGE. TURNOVER THE HIGH PRESSURE DRIP TRAP TO NEWPCC AND TRANSPORT SALVAGED MATERIALS TO A DESIGNATED ON-SITE LOCATION.
6. DISCONNECT AND SALVAGE THE FLAME ARRESTOR ON THE GAS COMPRESSOR SUCTION. TURNOVER THE FLAME ARRESTOR TO NEWPCC AND TRANSPORT SALVAGED MATERIALS TO A DESIGNATED ON-SITE LOCATION.
7. DISCONNECT AND SALVAGE THE SEDIMENT AND CONDENSATE ACCUMULATOR WITH DRIP TRAP AND SUPPORT STAND ON THE GAS COMPRESSOR SUCTION. DISCONNECT 25 MM VENT LINE WITH ISOLATION PLUG VALVE. TURNOVER THE SEDIMENT AND CONDENSATE ACCUMULATOR WITH DRIP TRAP, 25 MM PLUG VALVE, AND SUPPORT STAND TO NEWPCC AND TRANSPORT SALVAGED MATERIALS TO A DESIGNATED ON-SITE LOCATION.
8. PIPE INSULATING MATERIALS CONTAIN ASBESTOS. WORKING WITH ASBESTOS SHALL ABIDE BY THE MANITOBA WORKPLACE SAFETY & HEALTH DIVISION 'GUIDELINE FOR WORKING WITH ASBESTOS" AND OTHER PROVINCIAL REGULATIONS.
9. REMOVE AND SALVAGE 150 MM DIAMETER PLUG VALVE (DV116-B). DEMOLISH AND REMOVE 150 MM DIAMETER INTERCONNECTION SUPPLY PIPE TO GAS DISTRIBUTION HEADER. INSTALL ANSI CLASS 150 SLIP-ON WELDED FLANGE AT TEE AND INSTALL A BLIND FLANGE. REINSULATE AREA WHERE INSULATION WAS REMOVED AND PAINT. TURNOVER THE PLUG VALVE (DV116-B) TO NEWPCC AND TRANSPORT SALVAGED MATERIALS TO A DESIGNATED ON-SITE LOCATION.
10. DEMOLISH AND REMOVE 150 MM DIAMETER DIGESTER GAS DISTRIBUTION HEADER, FLOW BALANCING HEADER, AND GAS PIPING.
11. DEMOLISH 150 MM DIAMETER COMPRESSOR COMMON SUCTION LINE.
12. DISCONNECT POWER TO CONTROLLER. DISCONNECT AND SALVAGE 150 MM DIAMETER ELECTRIC CONTROL VALVE (D415-HV), PLUG VALVE (D410-HV1) AND PLUG VALVE (D116-E). REMOVE AND DISCONNECT VERTICALLY MOUNTED PLUG VALVE (D116-D). TURNOVER THE ELECTRIC CONTROL VALVE (D415-HV), PLUG VALVE (DV410-HV1) AND PLUG VALVE (D116-D) TO NEWPCC AND TRANSPORT SALVAGED MATERIALS TO A DESIGNATED ON-SITE LOCATION.
13. REMOVE STAINLESS STEEL ELBOW/TEE AND STAINLESS STEEL SPOOL PIECE. TURNOVER TO NEWPCC AND TRANSPORT SALVAGED MATERIALS TO A DESIGNATED ON-SITE LOCATION.
14. DEMOLISH AND REMOVE GAS SNUBBER, DRIP TRAP, DRAIN LINES, AND SUPPORTS. REMOVE FLOOR ANCHORS AND PATCH HOLES WITH A CEMENTITIOUS CONCRETE PATCHING MATERIAL.
15. DISCONNECT HEAT TRACING. DEMOLISH AND REMOVE HEAT TRACING CONDUCTORS AND CONDUIT BACK TO ELECTRICAL DISTRIBUTION PANEL. DEMOLISH AND REMOVE GAS PIPING, HEAT TRACING, INSULATION AND VENT PIPING PENETRATING THROUGH ROOF OF DIGESTER GALLERY, AND DIGESTER.
16. DEMOLISH AND REMOVE CURBING, INSULATION, AND FLASHING AROUND PIPE PENETRATION THROUGH ROOF OF GALLERY.
17. PATCH OPENING THROUGH ROOF WITH A CEMENTITIOUS MATERIAL; REFER TO STRUCTURAL FOR ADDITIONAL DETAILS. INSULATE AND PATCH BUILT UP ROOF AREA TO MATCH THE EXISTING. REFER TO STRUCTURAL FOR ADDITIONAL DETAILS

LEGEND

TO BE DEMOLISHED
NEW PIPING
EXISTING PIPING

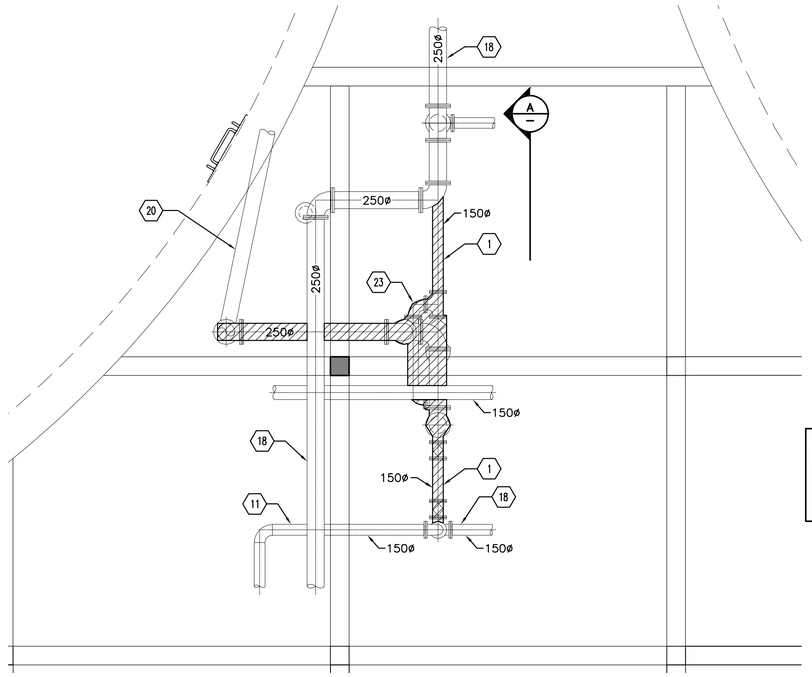

1 – EXISTING DIGESTER NUMBER 11 GAS WITHDRAWAL PIPE PLAN
1:50

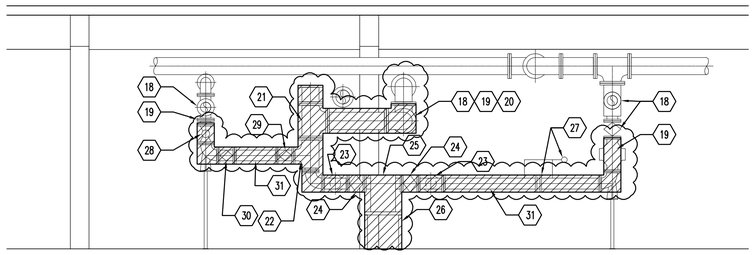

CAUTION:
THE INTERIOR OF THE BIOGAS PIPES AND EQUIPMENT MAY CONTAIN A LAYER OF CARBON RESIDUAL THAT MAY BE A PYROPHORIC DUST. DUE TO THE COMPLEX INTERRELATION BETWEEN MOISTURE, OXYGEN AND CARBON, THE CARBON MAY SELF-IGNITE.

A – EXISTING DIGESTER NUMBER 11 GAS WITHDRAWAL PIPE
1:50

18. GAS PIPE TO REMAIN.
19. COORDINATE SHUT DOWN AND ISOLATION OF GAS PIPE SYSTEM WITH THE NORTH END WATER POLLUTION CONTROL CENTRE OPERATIONS PERSONNEL. SUBMIT SHUT-DOWN PLAN IN WRITING AT LEAST ONE WEEK BEFORE WORKING ON GAS SYSTEM. SHUT-DOWN REQUEST SHALL EXPLAIN WHAT AREA IS TO BE SHUT DOWN AND LOCKED-OUT.
20. DEMOLISH AND REMOVE 250 MM DIAMETER DIGESTER 11 GAS DRAW OFF PIPE BACK TO VERTICAL TEE.
21. DEMOLISH AND REMOVE 250 MM DIAMETER TEE.
22. DEMOLISH AND REMOVE 250 MM DIAMETER REDUCING TEE.
23. DISCONNECT AND SALVAGE 150 MM DIAMETER MOISTURE/SEDIMENT TRAP BYPASS WITH VALVE. TURNOVER THE BYPASS WITH VALVE TO NEWPCC AND TRANSPORT SALVAGED MATERIALS TO A DESIGNATED ON-SITE LOCATION.
24. DISCONNECT AND SALVAGE 150 MM PLUG VALVES D117D, D117E AND D117F. TURNOVER THE PLUG VALVES D117D, D117E AND D117F TO NEWPCC AND TRANSPORT SALVAGED MATERIALS TO A DESIGNATED ON-SITE LOCATION.
25. DISCONNECT AND SALVAGE 150 MM DIAMETER MOISTURE/SEDIMENT TRAP. TURNOVER THE MOISTURE/SEDIMENT TRAP TO NEWPCC AND TRANSPORT SALVAGED MATERIALS TO A DESIGNATED ON-SITE LOCATION.
26. DISCONNECT AND SALVAGE MOISTURE/SEDIMENT TRAP SUPPORT STAND. TURNOVER THE MOISTURE/SEDIMENT TRAP SUPPORT STAND TO NEWPCC AND TRANSPORT SALVAGED MATERIALS TO A DESIGNATED ON-SITE LOCATION.
27. DISCONNECT POWER AND CONTROL WIRES TO PRESSURE TRANSMITTER. DISCONNECT AND SALVAGE PRESSURE TRANSMITTER AND VORTEX ORIFICE PLATE. TURNOVER THE PRESSURE TRANSMITTER AND VORTEX ORIFICE PLATE TO NEWPCC AND TRANSPORT SALVAGED MATERIALS TO A DESIGNATED ON-SITE LOCATION.
28. DISCONNECT AND SALVAGE 150 MM PLUG VALVE DV116D. TURNOVER THE PLUG VALVE DV116D TO NEWPCC AND TRANSPORT SALVAGED MATERIALS TO A DESIGNATED ON-SITE LOCATION.
29. DISCONNECT AND SALVAGE 150 MM PLUG VALVE DV116E. TURNOVER THE PLUG VALVE DV116E TO NEWPCC AND TRANSPORT SALVAGED MATERIALS TO A DESIGNATED ON-SITE LOCATION.
30. DISCONNECT AND SALVAGE 150 MM PLUG VALVE DV116E. TURNOVER THE PLUG VALVE DV116E TO NEWPCC AND TRANSPORT SALVAGED MATERIALS TO A DESIGNATED ON-SITE LOCATION.
31. DEMOLISH AND REMOVE EXISTING 150 MM DIAMETER STAINLESS STEEL PIPE. TURNOVER THE STAINLESS STEEL PIPE TO NEWPCC AND TRANSPORT SALVAGED MATERIALS TO A DESIGNATED ON-SITE LOCATION.

APEGM
Certificate of Authorization
Stantec Consulting Ltd.
No. 1301

METRIC
WHOLE NUMBERS INDICATE MILLIMETRES
DECIMALIZED NUMBERS INDICATE METRES

NO.	REVISIONS	DATE	BY
3.	ISSUED FOR TENDER	12.11.01	S.K.B.
2.	ISSUED FOR 95% REVIEW	12.09.12	S.K.B.
1.	ISSUED FOR 60% REVIEW	12.07.27	S.K.B.

B.M. ELEV.

Stantec Consulting Ltd.
905 Waverley Street, Winnipeg, Manitoba
Tel 204-489-5900 Fax 204-453-9012

DESIGNED BY	A.B.	CHECKED BY	S.A.B.
DRAWN BY	K.R.	APPROVED BY	S.K.B.
HOR. SCALE: VERTICAL:	1:50	RELEASED FOR CONSTRUCTION:	
DATE	2012.07.05	DATE	

ENGINEER'S SEAL
ORIGINAL SEALED BY A.H. BEGHIN P. ENG. 12/10/31

BID OPPORTUNITY NO. 573-2012

Winnipeg
THE CITY OF WINNIPEG
WATER AND WASTE DEPARTMENT

NORTH END WATER POLLUTION CONTROL CENTRE
REHABILITATION OF DIGESTER No. 11 AND SLUDGE HOLDING TANK No. 5 AND 7
GALLERY No. 5
UPPER LEVEL ELEV. 233.820 - DEMOLITION PLAN

CITY DRAWING NUMBER: 1-0101D-M0003-001
SHEET 9 OF 29

I:\1112\active\111213020_NEWPCC Digester\drawing\402_design\sheet_files\04_process\1-0101D-M0003-001.dwg
2012 October 31, 12:07 p.m.