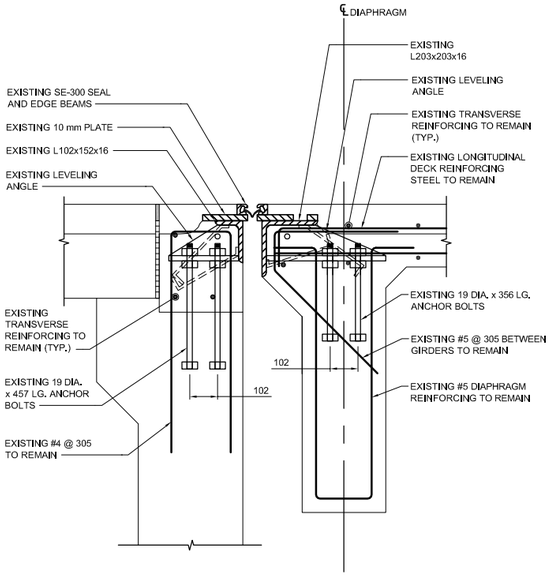

EXISTING

B 10 REINFORCEMENT 1:10
2,4,6,8

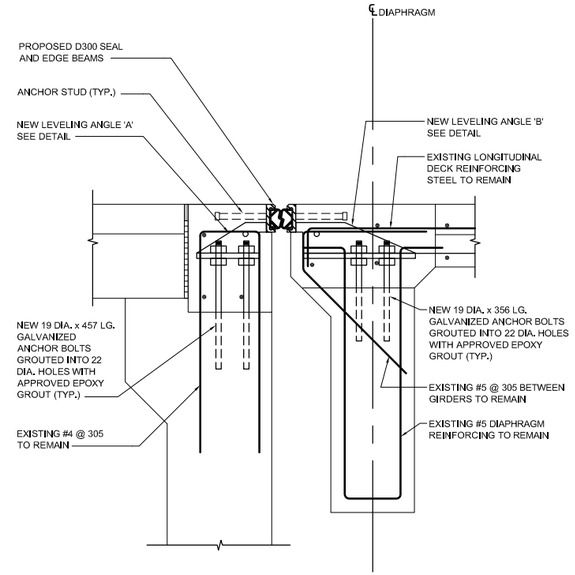

PROPOSED

C 10 REINFORCEMENT 1:10
3,5,7,9

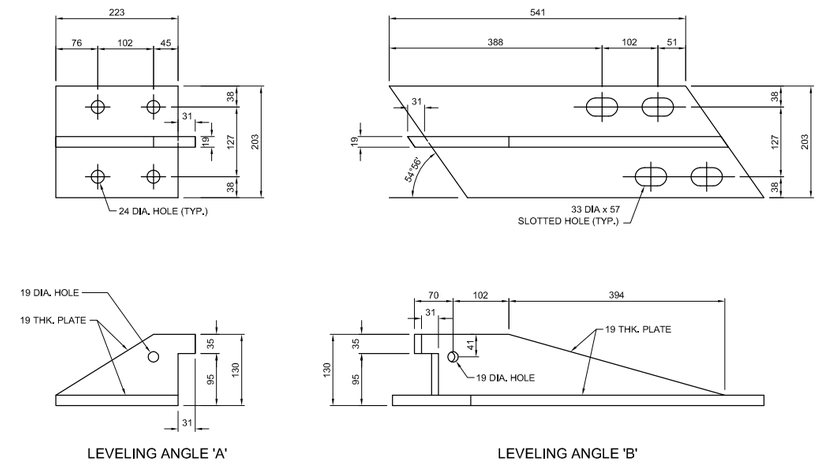

LEVELING ANGLE 'A'

LEVELING ANGLE 'B'

LEVELING ANGLE DETAILS
SCALE 1:5

NOTES:

1. ENSURE THAT THE EXISTING REBAR THAT IS TO REMAIN IS NOT DAMAGED DURING CONCRETE AND EXPANSION JOINT REMOVALS. THE CONTRACTOR SHALL REPLACE ANY DAMAGED REINFORCING TO THE SATISFACTION OF THE CONTRACT ADMINISTRATOR AT NO COST TO THE CITY.
2. IN THE EVENT OF BAR CONFLICT WITH THE EXPANSION JOINT AND/OR EXCESSIVE CORROSION IN THE EXISTING REINFORCEMENT, THE CONTRACTOR SHALL REPLACE THE CONFLICTING AND-OR CORRODED REINFORCEMENT IN ACCORDANCE WITH E9.
3. ANCHOR BOLTS SHALL BE IN ACCORDANCE WITH CSA STANDARD CAN/CSA G40.21 GRADE 300W OR APPROVED EQUAL IN ACCORDANCE WITH B5.
4. ALL NEW ANCHOR BOLTS SHALL BE PROVIDED WITH 2 HEX NUTS AND 2 WASHERS AND SHALL BE HOT-DIP GALVANIZED.

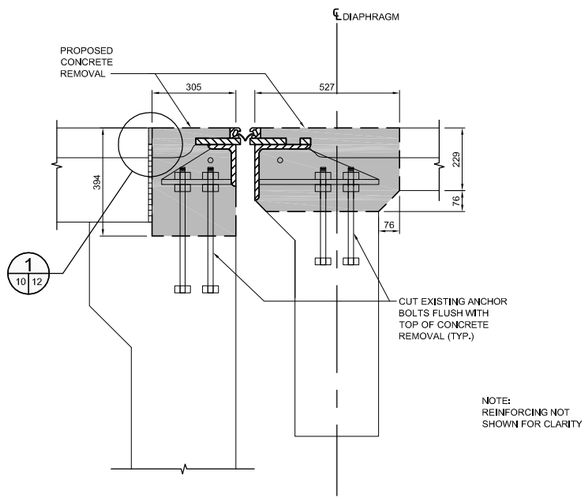

EXISTING

B 10 CONCRETE 1:10
2,4,6,8

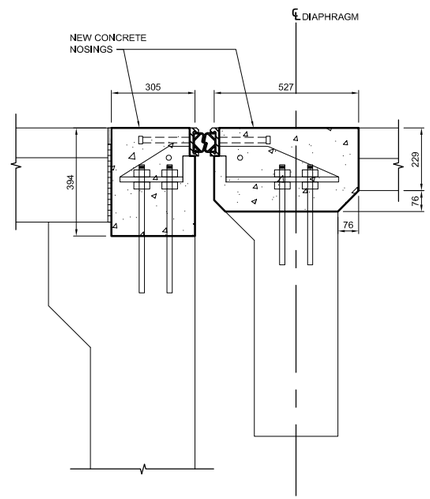

PROPOSED

C 10 CONCRETE 1:10
2,4,6,8

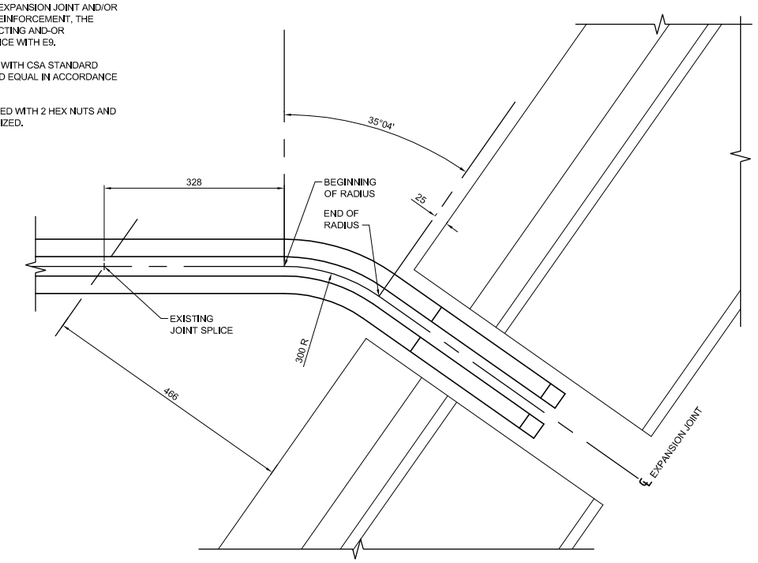

EXPANSION JOINT DETAIL AT BARRIER (TYP.)
SCALE 1:5

APEGM
Certificate of Authorization
Dillon Consulting Limited (MB)
No. 1789 Date: May 8, 2012

DRAWING REDUCED NOT TO SCALE

B.M.1 ELEV.	BM CAP N/B BRIDGE, S.E. BARRIER AT EXP. JT. 242.564 (LOCAL SURVEY)		
B.M.2 ELEV.	S.E. BOLT ON PED. S. OF R/R W. OF S/B BRIDGE 233.125 (LOCAL SURVEY)		
1	ISSUED FOR TENDER	05/08/12	JGW
0	ISSUED FOR REVIEW	05/01/12	JGW
NO.	REVISIONS	DATE	BY

DESIGNED BY	GCL
DRAWN BY	JGW
CHECKED BY	SSR
APPROVED BY	MBL
HOR. SCALE	AS SHOWN
VERTICAL	AS SHOWN
DATE	MAY 8, 2012

DILLON CONSULTING

RELEASED FOR CONSTRUCTION

DATE

ENGINEER'S SEAL
PROVINCE OF MANITOBA
CERTIFIED STAMPED BY
G.C. LOEPPKY
MAY 8, 2012
Member 24656
REGISTERED PROFESSIONAL ENGINEER

CONSULTANT PROJECT NO.
12-5995

Winnipeg
THE CITY OF WINNIPEG
PUBLIC WORKS DEPARTMENT

2012 BRIDGE MAINTENANCE PROGRAM
ROUTE 20 KEEWATIN OVERPASS

EXPANSION JOINT - DETAILS (1 OF 3)

CITY DRAWING NUMBER B123-12-11-R1
SHEET 11 OF 15

BID OPP. NO. 363-2012