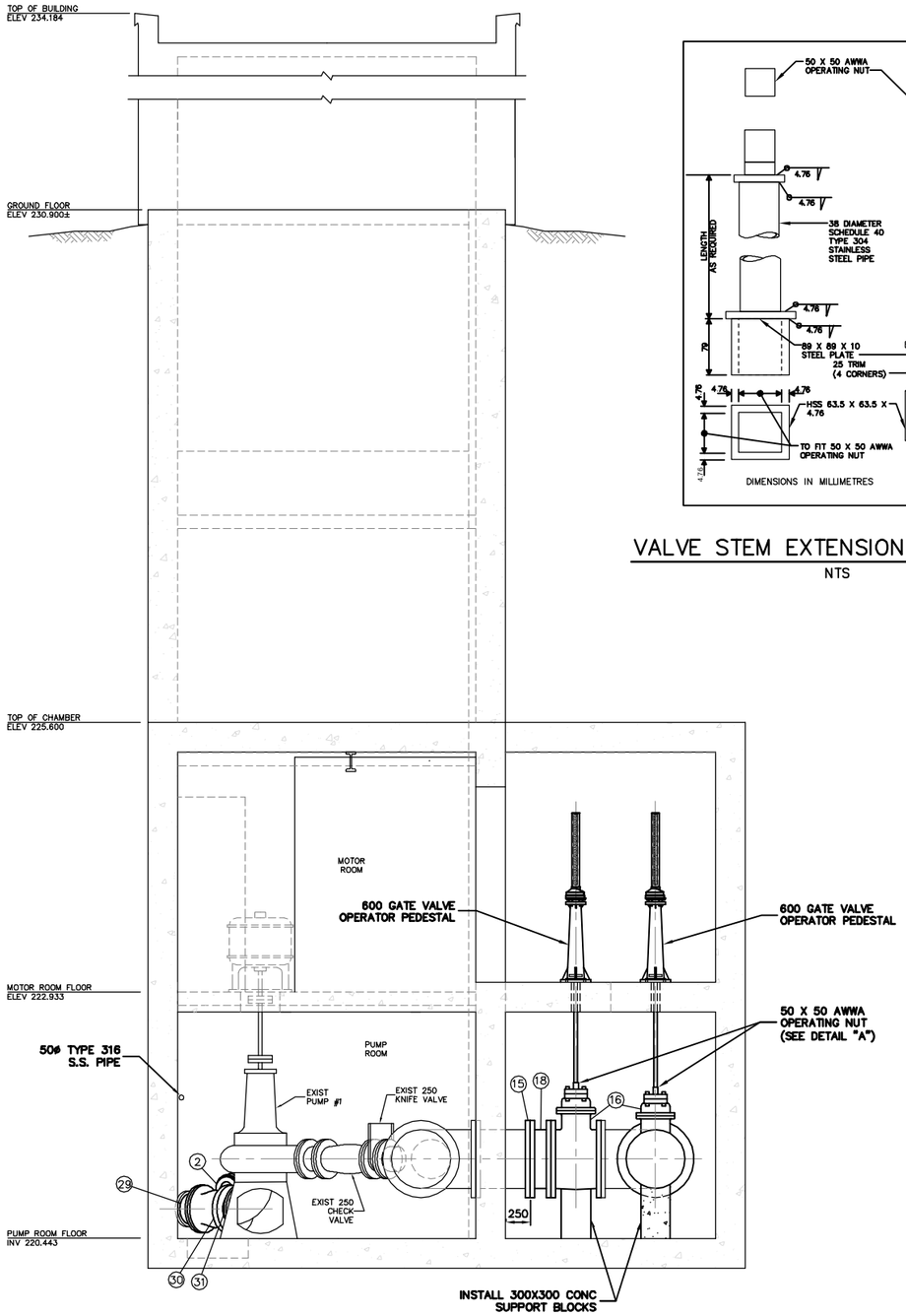

SECTION B–B

SCALE 1:30

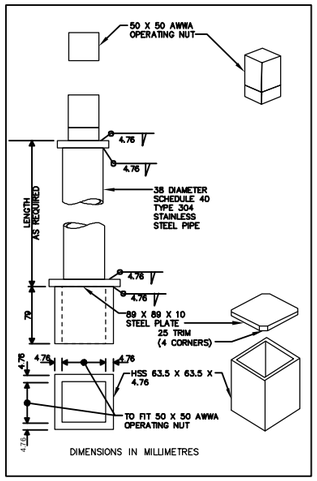

VALVE STEM EXTENSION DETAIL "A"

NTS

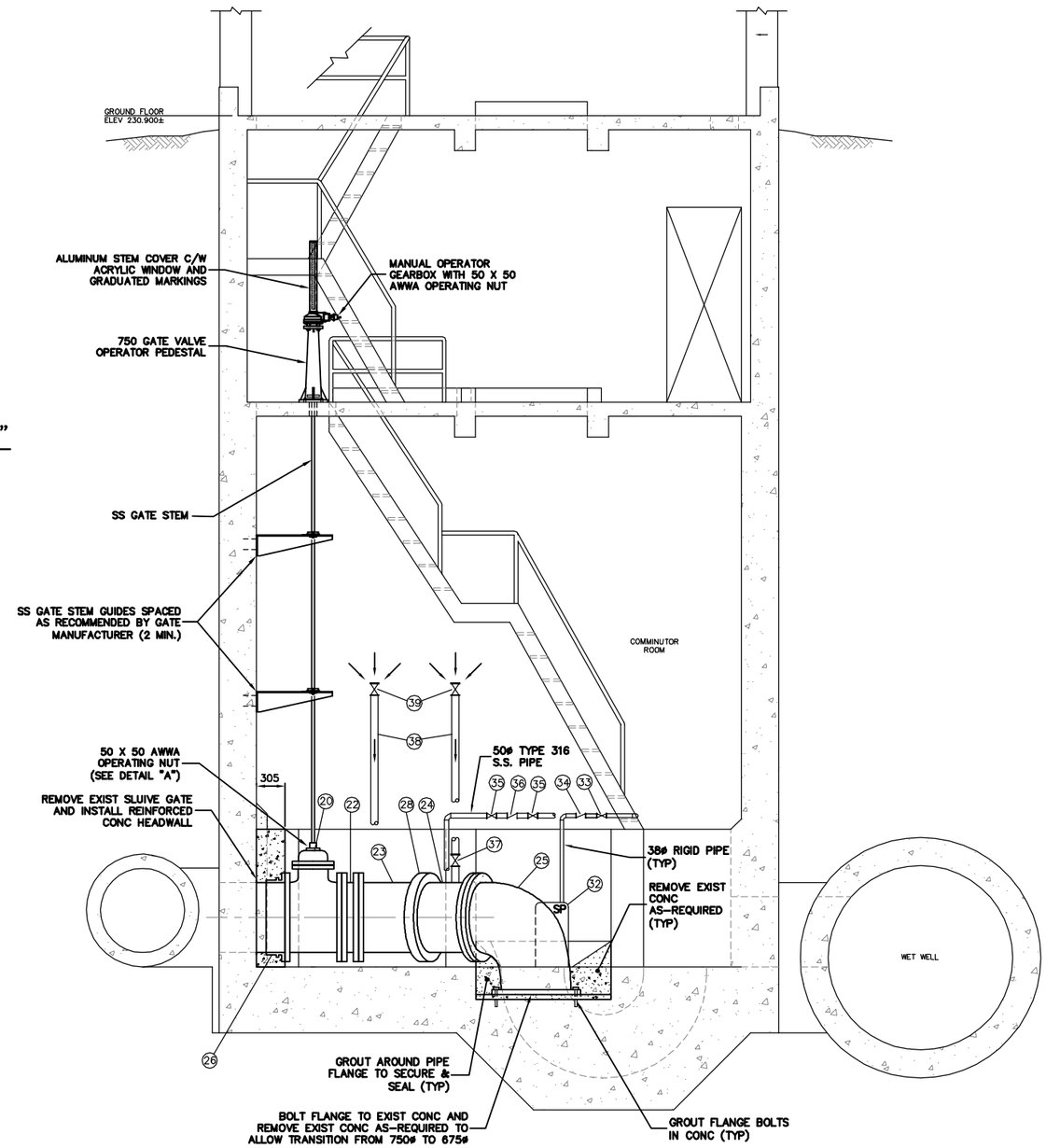

SECTION C–C

SCALE 1:30

METRIC
WHOLE NUMBERS INDICATE MILLIMETRES
DECIMALIZED NUMBERS INDICATE METRES

FOR MATERIALS LIST:
SEE DRAWING 1–0164L–M0007

FOR CONSTRUCTION NOTES:
SEE DRAWING 1–0164L–M0006

B.M. ELEV.	FIELD BOOK #:		
POSTED TO LBIS			
NO.	REVISIONS	DATE	BY

CITY OF WINNIPEG
WATER AND WASTE
ENGINEERING DIVISION

DESIGNED BY	DEB	CHECKED BY	DEB
DRAWN BY	CJH	APPROVED BY	KZ
HOR. SCALE	1:250	RELEASED FOR CONSTRUCTION	K.R. ZUREK
VERTICAL	1:50		
DATE	2012 02 21	DATE	2012 02 22

ENGINEER'S SEAL

ORIGINAL SIGNED BY K.R. ZUREK 2012 02 22

BID OPPURTUNITY: 907–2011
FILENAME : Montcalm–new.dwg
PLOT DATE: 2012 02 23

Winnipeg

THE CITY OF WINNIPEG
WATER AND WASTE DEPARTMENT

2011 INSTALLATION OF NEW PUMPING UNITS AND MODIFICATIONS TO THE MONTCALM WASTEWATER PUMPING STATION UPGRADES
SECTION VIEWS

SHEET 3 OF 3

CITY DRAWING NUMBER
1–0164L–M0008