A1 SIZE - 594mm x 841mm

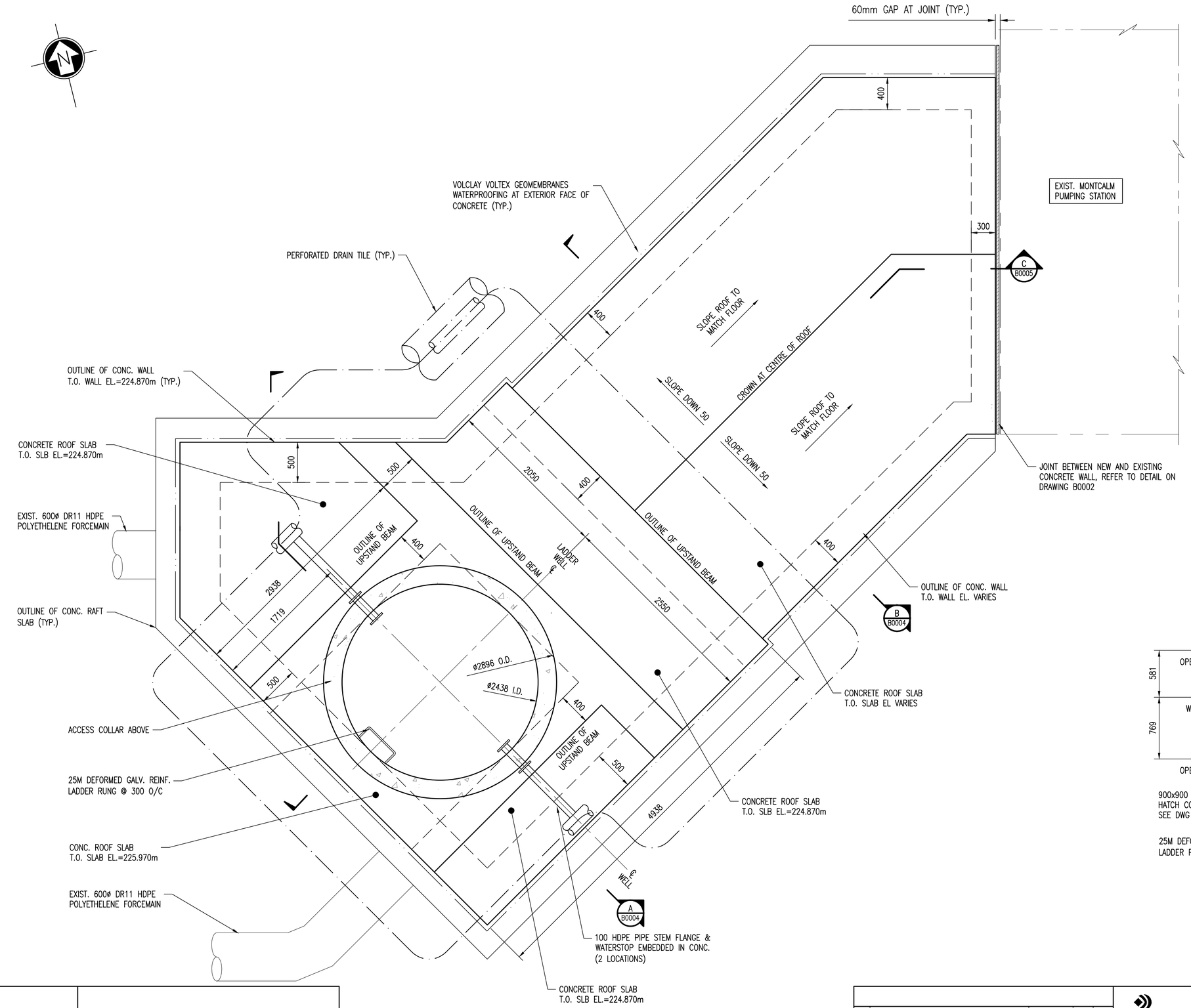

PLAN– TOP OF SLAB ELEVATION AT 223.450m/224.870m

SCALE: 1 : 25

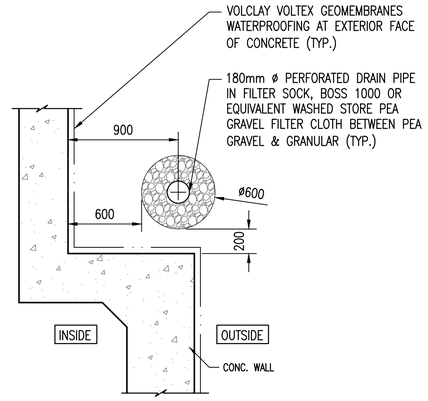

TYPICAL DRAIN TILE DETAIL

SCALE: 1 : 25

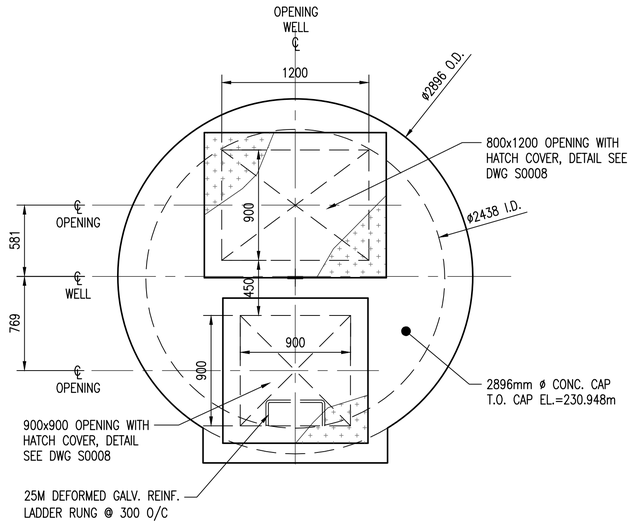

PLAN– TOP OF SLAB ELEVATION AT 230.732m

SCALE: 1 : 25

DRAWING NUMBER	REFERENCE DRAWINGS
261	MONTCALM SEWAGE PUMPING STATION ADDITIONS (EQUIPMENT)
05358	MONTCALM SEWAGE PUMPING STATION FORCEMAIN REPLACEMENT

APEGM Certificate of Authorization
SNC-Lavalin Inc.
No. 4489

NO.	REVISIONS	DATE	DESIGN	CHECK
00	ISSUED FOR TENDER, BID OPP. 907–2011	2012/02/23	R.B.	D.S.

SNC·LAVALIN

SNC–LAVALIN INC.
148 Nature Park Way
Winnipeg, MB, Canada R3P 0X7
204–786–8080

DESIGNED BY: R. BEAN	CHECKED BY: D. SIDHU
DRAWN BY: L. GAO	APPROVED BY: C. REIMER
SCALE: 1:25	RELEASED FOR CONSTRUCTION BY: K.R. ZUREK
DATE: 2011/09/14	DATE: 2012/02/23
CONSULTANT NO.: 508042–0000–44DD–0003	

ENGINEER'S SEAL

ORIGINAL DRAWING SEALED BY:
R.C.BEAN
SNC–LAVALIN INC
2012/02/12
REV.00

Winnipeg
THE CITY OF WINNIPEG
WATER AND WASTE DEPARTMENT

MONTCALM WASTEWATER PUMPING STATION
2011 UPGRADES
ROOF PLAN
FLOWMETER CHAMBER
TOP

CITY DRAWING NUMBER	SHEET	REV.	SIZE
1–0164L–B0003	001	00	A1

1–0164L–B0003–001–00.dwg

LAST SAVE: 2012/02/24 – 11:11am
PATH: M:\508042\4ENG\42STR\DD – General DWG\1–0164L–B0003–001–00.dwg