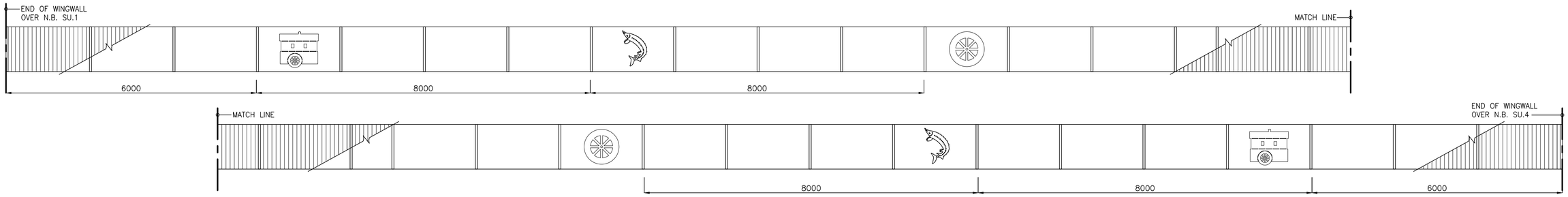

RAILING ELEVATION – ART PANELS
1:50

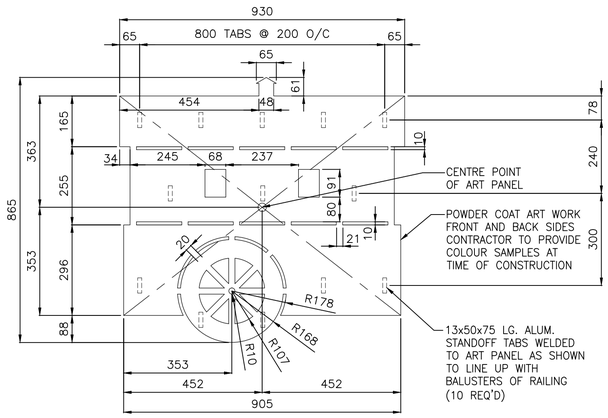

ART PANEL ELEVATION – PLAQUE 'A'
1:10 (2 REQUIRED)

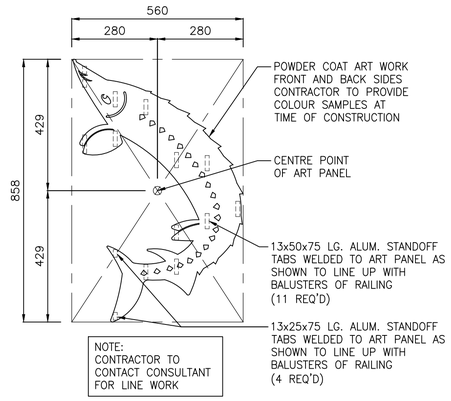

ART PANEL ELEVATION – PLAQUE 'B'
1:10 (2 REQUIRED)

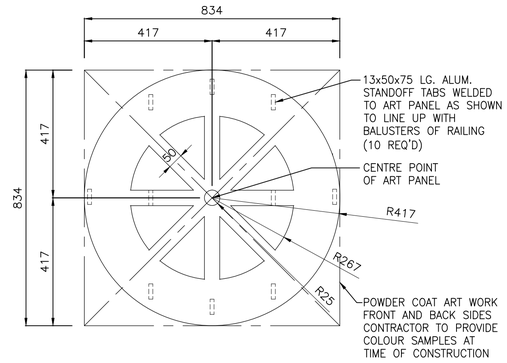

ART PANEL ELEVATION – PLAQUE 'C'
1:10 (2 REQUIRED)

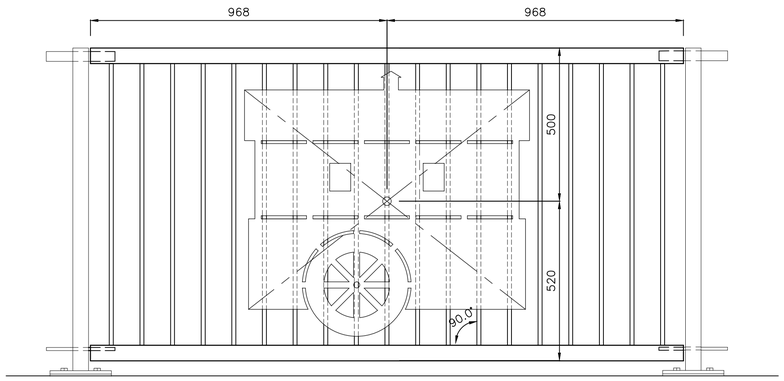

RAILING ELEVATION – PANEL 'E'
1:10 (2 REQUIRED)

REFER TO PANEL 'A' ON SHEET 51
FOR ASSEMBLY DETAILS
ATTACH TO CREEK SIDE OF RAILING

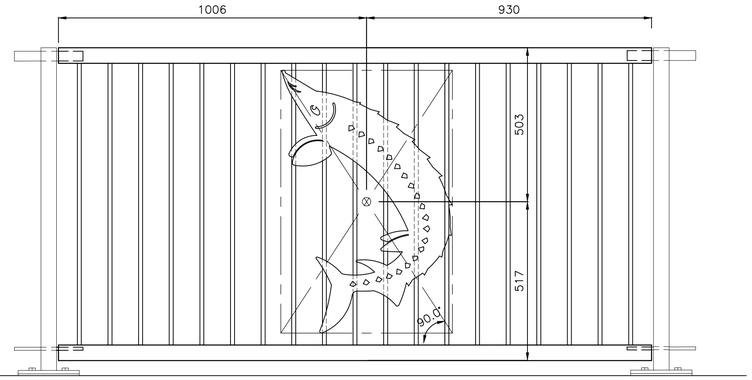

RAILING ELEVATION – PANEL 'F'
1:10 (2 REQUIRED)

REFER TO PANEL 'B' ON SHEET 51
FOR ASSEMBLY DETAILS
ATTACH TO CREEK SIDE OF RAILING

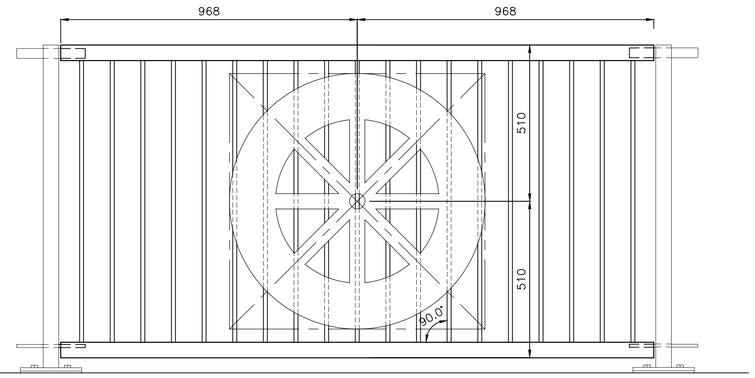

RAILING ELEVATION – PANEL 'G'
1:10 (2 REQUIRED)

REFER TO PANEL 'C' ON SHEET 51
FOR ASSEMBLY DETAILS
ATTACH TO CREEK SIDE OF RAILING

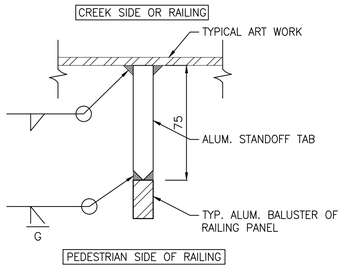

TYPICAL STANDOFF TAB WELD DETAIL
1:2

APEGM
Certificate of Authorization
Stantec Consulting Ltd.
No. 1301 Date:_____

METRIC
WHOLE NUMBERS INDICATE MILLIMETRES
DECIMALIZED NUMBERS INDICATE METRES

LOCATION APPROVED
UNDERGROUND STRUCTURES

SUPV. U/G STRUCTURES COMMITTEE — DATE

NOTE:
LOCATION OF UNDERGROUND STRUCTURES AS SHOWN ARE BASED ON THE BEST INFORMATION AVAILABLE BUT NO GUARANTEE IS GIVEN THAT ALL EXISTING UTILITIES ARE SHOWN OR THAT THE GIVEN LOCATIONS ARE EXACT. CONFIRMATION OF EXISTENCE AND EXACT LOCATION OF ALL SERVICES MUST BE OBTAINED FROM THE INDIVIDUAL UTILITIES BEFORE PROCEEDING WITH CONSTRUCTION.

B.M.
ELEV.

NO.	REVISIONS	DATE	BY
0	ISSUED FOR TENDER	11.12.15	K.S.A.

Stantec Consulting Ltd.
100–1355 Taylor Ave., Winnipeg, Manitoba
Tel 204–928–8840 Fax 204–284–4795

DESIGNED BY	K.S.A.	CHECKED BY	K.S.A.
DRAWN BY	V.J.F.	APPROVED BY	B.J.W.
HOR. SCALE: VERTICAL:	AS SHOWN	RELEASED FOR CONSTRUCTION:	
DATE	DEC. 15, 2011	DATE	

ENGINEER'S SEAL

CONSULTANT DRAWING NO.
S-704

THE CITY OF WINNIPEG
PUBLIC WORKS DEPARTMENT
ENGINEERING DIVISION

STURGEON ROAD
BRIDGE REPLACEMENT
PORTAGE AVENUE TO HALLONQUIST DRIVE
RAILING ART PANEL ELEVATIONS

SHEET 51 OF 82
CAD FILE DRAWING NUMBER 31590s-703-767.dwg
CITY DRAWING NUMBER B120-12-051

V:\1137\active\113731590\drawing\402_design\sheet_files\2011-11-12_tender_issue\31590s-703-767.dwg
Date: 2011 Dec 20 4:13pm Login: Beernaerts, James