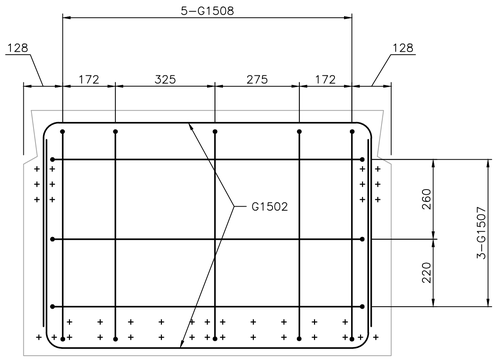


A A SECTION
36 38 37 38 1:10

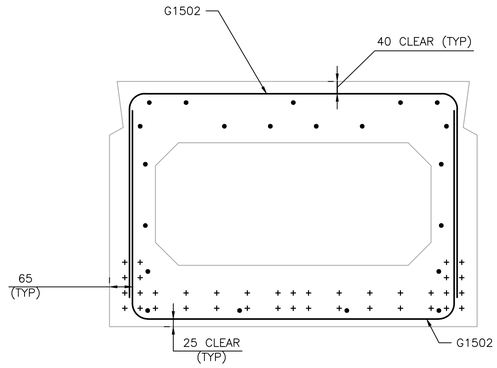


B B SECTION
36 38 37 38 1:10

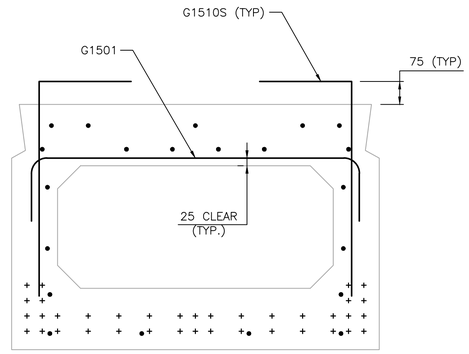


C C SECTION
36 38 37 38 1:10

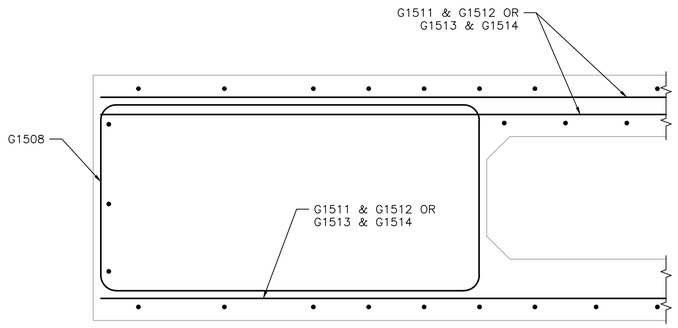


D D SECTION
36 38 37 38 1:10

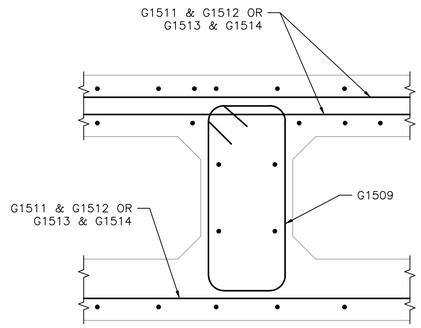


E E SECTION
36 38 37 38 1:10

## BILL OF REINFORCING STEEL

SUPERSTRUCTURE

| MARK | TYPE | LENGTH (mm) | BENT BARS A | B | C | D | E | R | NO. OF BARS PER GIRDER G1 | G2 | G3 | G4 | TOTAL |
|---|---|---|---|---|---|---|---|---|---|---|---|---|---|
| G1501 | B | 1590 | 1070 | 260 | 260 | | | | 51 | 51 | 65 | 65 | 3340 |
| G1502 | B | 2370 | 1070 | 650 | 650 | | | | 108 | 108 | 140 | 140 | 7120 |
| G1503 | B | 2374 | 1074 | 650 | 650 | | | | 4 | 4 | 4 | 4 | 240 |
| G1504 | B | 2441 | 1141 | 650 | 650 | | | | 4 | 4 | 4 | 4 | 240 |
| G1505 | B | 2539 | 1239 | 650 | 650 | | | | 4 | 4 | 4 | 4 | 240 |
| G1506 | B | 2671 | 1371 | 650 | 650 | | | | 12 | 12 | 12 | 12 | 720 |
| G1507 | G | 5052 | 856 | 1860 | 1020 | | | | 6 | 6 | 6 | 6 | 360 |
| G1508 | C | 4420 | 1250 | 750 | 750 | 1250 | 210 | | 16 | 16 | 16 | 16 | 960 |
| G1509 | C | 2600 | 340 | 750 | 750 | 340 | 210 | | 8 | 8 | 8 | 8 | 480 |
| G1510S | A | 1000 | 700 | 300 | | | | | 96 | 96 | 130 | 130 | 6440 |
| STRAIGHT BARS | | | | | | | | | | | | | |
| G1511 | | 7900 | | | | | | | 21 | 21 | | | 840 |
| G1512 | | 9900 | | | | | | | 21 | 21 | | | 840 |
| G1513 | | 10800 | | | | | | | | | 21 | 21 | 420 |
| G1514 | | 12200 | | | | | | | | | 21 | 21 | 420 |
| REQUIRED NUMBER OF GIRDERS | | | | | | | | | 32 | 8 | 16 | 4 | 60 |
| TOTAL MASS OF REINFORCING STEEL | | | | | | | | | | | | | 93636.0 kg |

BAR TYPES

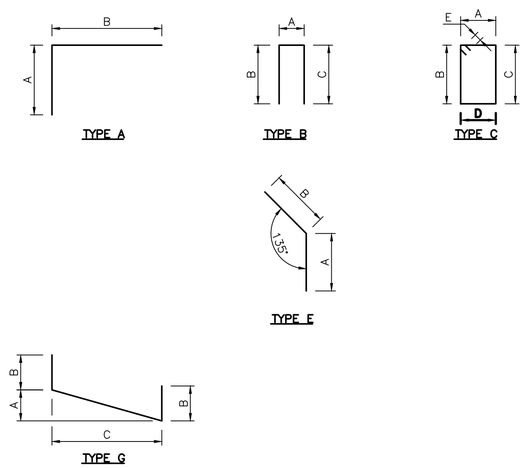


APEGM
Certificate of Authorization
Stantec Consulting Ltd.
No. 1301 Date:_____

**METRIC**
WHOLE NUMBERS INDICATE MILLIMETRES
DECIMALIZED NUMBERS INDICATE METRES

LOCATION APPROVED
UNDERGROUND STRUCTURES

SUPV. U/G STRUCTURES COMMITTEE DATE

NOTE:
LOCATION OF UNDERGROUND STRUCTURES AS SHOWN ARE BASED ON THE BEST INFORMATION AVAILABLE BUT NO GUARANTEE IS GIVEN THAT ALL EXISTING UTILITIES ARE SHOWN OR THAT THE GIVEN LOCATIONS ARE EXACT. CONFIRMATION OF EXISTENCE AND EXACT LOCATION OF ALL SERVICES MUST BE OBTAINED FROM THE INDIVIDUAL UTILITIES BEFORE PROCEEDING WITH CONSTRUCTION.

B.M.
ELEV.

| NO. | REVISIONS | DATE | BY |
|---|---|---|---|
| 0 | ISSUED FOR TENDER | 11.12.15 | K.S.A. |

Stantec Consulting Ltd.
100–1355 Taylor Ave., Winnipeg, Manitoba
Tel 204–928–8840 Fax 204–284–4795

| | | | |
|---|---|---|---|
| DESIGNED BY | K.S.A. | CHECKED BY | K.S.A. |
| DRAWN BY | J.M.B. | APPROVED BY | B.J.W. |
| HOR. SCALE: | 1:10 | RELEASED FOR CONSTRUCTION: | |
| VERTICAL: | 1:10 | | |
| DATE | DEC. 15, 2011 | DATE | |

ENGINEER'S SEAL

CONSULTANT DRAWING NO.
S-506

THE CITY OF WINNIPEG
PUBLIC WORKS DEPARTMENT
ENGINEERING DIVISION

STURGEON ROAD
BRIDGE REPLACEMENT
PORTAGE AVENUE TO HALLONQUIST DRIVE
GIRDER REINFORCING
SCHEDULE & DETAILS

SHEET 38 OF 82
CAD FILE DRAWING NUMBER 31590s-501-767.dwg
CITY DRAWING NUMBER B120-12-038

V:\1137\active\131731590\drawing\402_design\sheet_files\2011-11-12_tender_issue\31590s-501-767.dwg
Date: 2011 Dec 20 3:52pm Login: Beernaerts, James