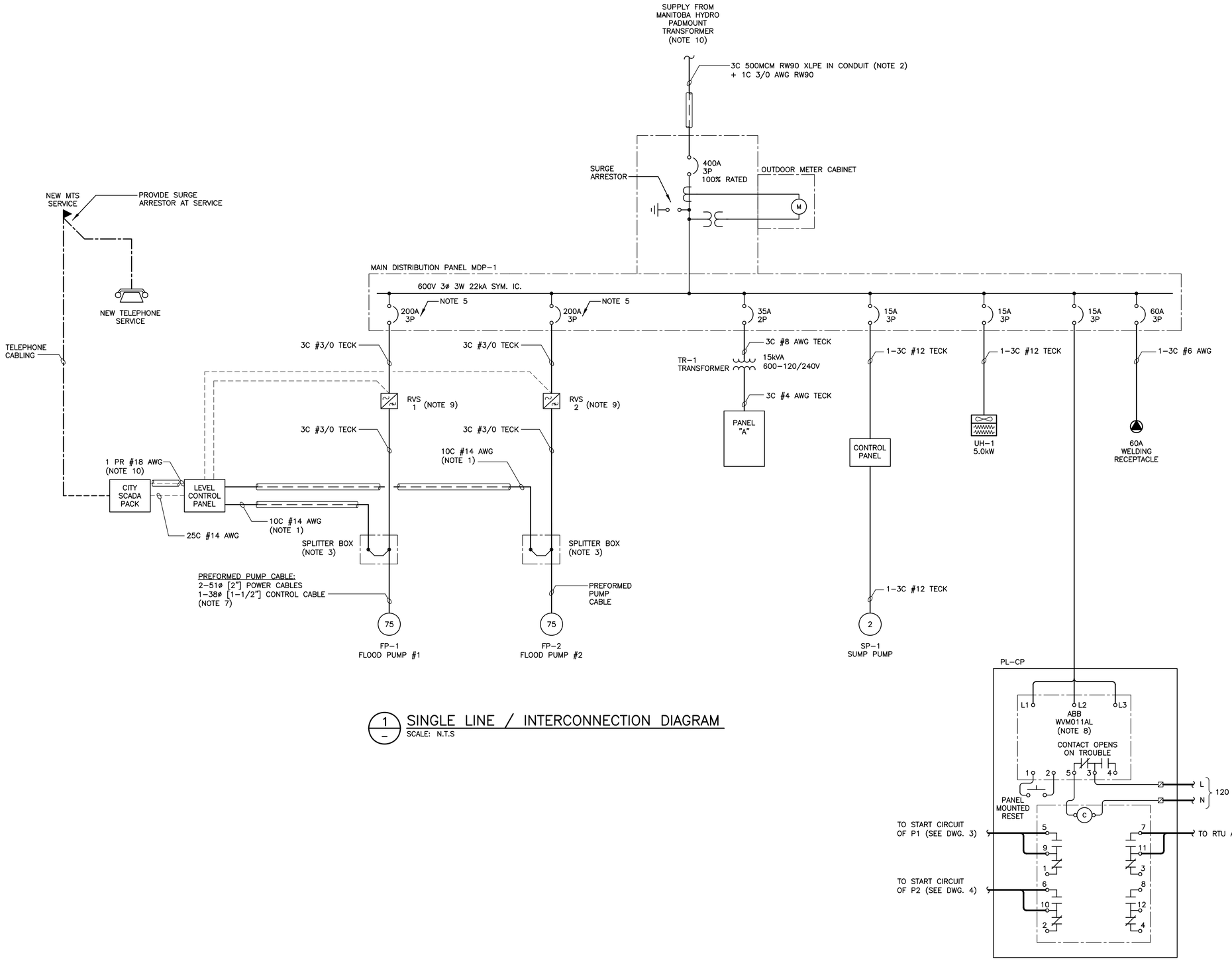

1 SINGLE LINE / INTERCONNECTION DIAGRAM

SCALE: N.T.S

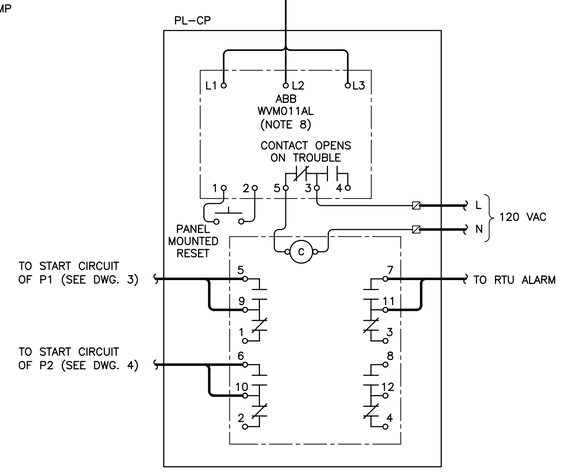

NOTES:

1. CONTROL CABLING SHALL BE RUN IN SEPARATE 38ø [1-1/2"] CONDUIT.
2. FEEDER SHALL BE IN ACCORDANCE WITH CEC DIAGRAM B4-4 DETAIL 1 AND TABLE D14B.
3. TERMINATION ENCLOSURE FOR THE CONNECTION TO THE PUMP POWER AND CONTROL CABLES SHALL BE SEPARATED BY A SUITABLE BARRIER. ENCLOSURE TO BE SUITABLE FOR OUTDOORS (NEMA 3R).
4. PROVIDE LOSS OF POWER ON ANY ONE PHASE AS SHOWN ON PANEL PL-CP.
5. CONFIRM BREAKER SIZE WITH REDUCED VOLTAGE STARTER (RVS) VENDOR.
6. POWER MONITOR SETPOINTS AS FOLLOWS:
   UNBALANCE: 9%
   LINE VOLTAGE: 600V
   TRIP DELAY: 2 SEC
   RESTART DELAY: 10 SEC
   SELECTOR: AUTO RESTART WITH DELAY
7. VERIFY CABLING WITH ACTUAL PUMP MOTORS SUPPLIED AND INSTALL APPROPRIATE SIZE CABLING AND REDUCED VOLTAGE STARTERS.
8. PROVIDE A SEPARATE 27ø [1"] CONDUIT SHALL BE RUN FROM THE LEVEL CONTROL PANEL TO THE CITY SCADA PACK FOR ANALOG CONTROL SIGNALS.
9. RVS EQUIPPED WITH A MANUAL OPERATED FULL VOLTAGE ACROSS THE LINE STARTER TO BE USED ONLY IN EMERGENCY CONDITIONS WHEN RVS HAS FAILED. THIS IS IN ADDITION TO THE NORMAL 'RUN' CONTACTOR WHICH BYPASS THE RVS ELECTRONICS WHEN THE LOAD IS UP TO SPEED.
10. HYDRO SERVICE TO BE SECURED FROM A FEEDER FROM MANITOBA HYDRO JESSIE STREET SUBSTATION.

LEGEND:

- REDUCED VOLTAGE STARTER
- BREAKER
- METER
- CURRENT TRANSFORMER
- VOLTAGE TRANSFORMER
- DISTRIBUTION TRANSFORMER
- MOTOR LOAD (110 — INDICATES HP)

LOAD DETAILS		
ELECTRIC HEAT	=	5kW
LIGHTING AND POWER	=	15kW
FLOOD PUMPS	=	200kW
TOTAL	=	222.5kW

APEGM
Certificate of Authorization
KGS Group
No. 245 Date: 25/03/09

LOCATION APPROVED
UNDERGROUND STRUCTURES
ORIGINAL SIGNED BY DERRICK SAEDAL.
SUPV. U/G STRUCTURES COMMITTEE — DATE

NOTE:
LOCATION OF UNDERGROUND STRUCTURES AS SHOWN ARE BASED ON THE BEST INFORMATION AVAILABLE, BUT NO GUARANTEE IS GIVEN THAT ALL EXISTING UTILITIES ARE SHOWN OR THAT THE GIVEN LOCATIONS ARE EXACT. CONFIRMATION OF EXISTENCE AND EXACT LOCATION OF ALL SERVICES MUST BE OBTAINED FROM THE INDIVIDUAL UTILITIES BEFORE PROCEEDING WITH CONSTRUCTION.

B.M. BM
ELEV. ELEV

NO.	REVISIONS	DATE	BY
0	ISSUED FOR TENDER	25/03/09	JLL

DESIGNED BY JLL
DRAWN BY GCN
CHECKED BY ORIGINAL SIGNED BY R.E. WILLMS
APPROVED BY ORIGINAL SIGNED BY J.L. LALONDE
HOR. SCALE
VERTICAL
DATE 2009-03-18

KGS GROUP CONSULTING ENGINEERS
RELEASED FOR CONSTRUCTION
ORIGINAL SIGNED BY RANDY FINGAS
DATE

ENGINEER'S SEAL
PROVINCE OF MANITOBA
R.LALONDE Member 32345
REGISTERED PROFESSIONAL ENGINEER

CONSULTANT PROJECT NO. 08-0163-02

THE CITY OF WINNIPEG
TRANSIT DEPARTMENT

SOUTHWEST RAPID TRANSIT CORRIDOR - STAGE 1
LAND DRAINAGE PUMPING STATION & ASSOCIATED WORKS

ELECTRICAL
SINGLE LINE DIAGRAM

CITY DRAWING NUMBER LD-5317
SHEET 18 OF 25
CONSULTANT DRAWING NUMBER C2-B2201-T