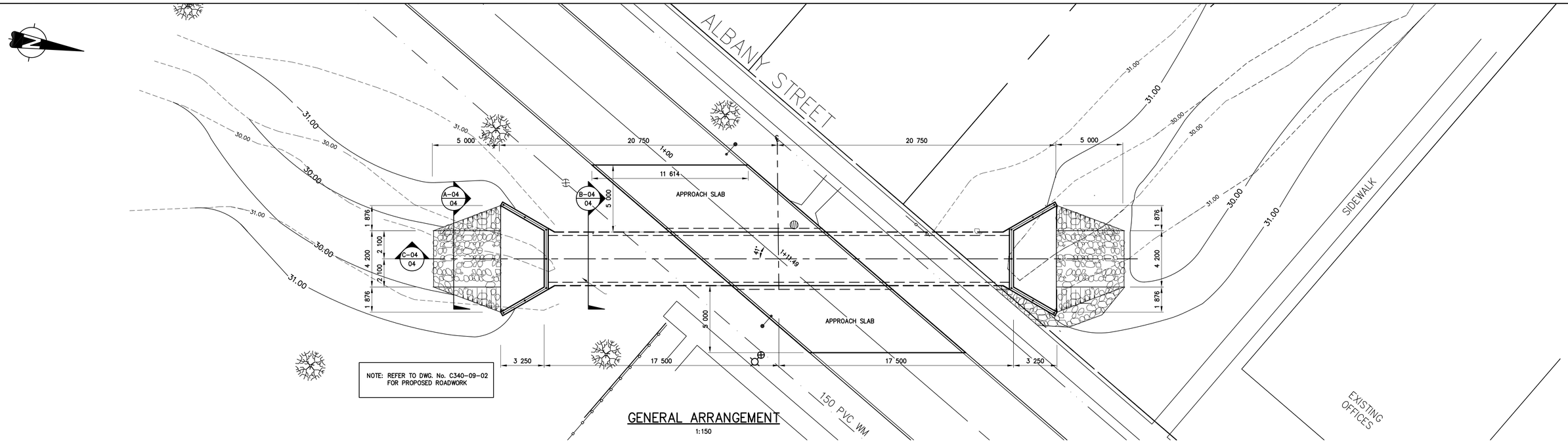

GENERAL ARRANGEMENT
1:150

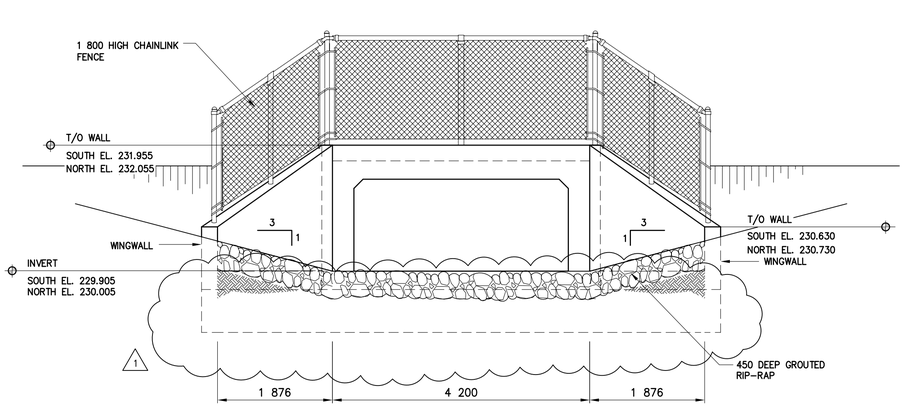

SECTION A-04 / 04
1:50

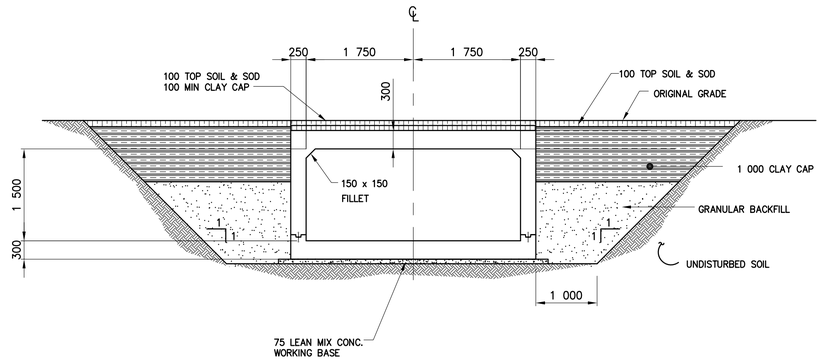

SECTION B-04 / 04
1:50

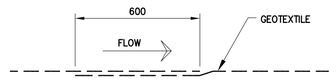

GEOTEXTILE OVERLAPPING DETAIL
N.T.S

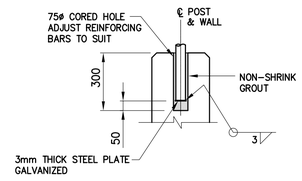

TYPICAL POST ANCHORAGE DETAIL
N.T.S.

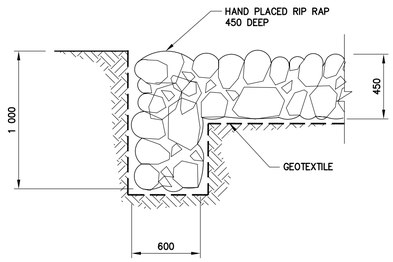

SECTION C-04 / 04
1:20

APEGM
Certificate of Authorization
MMM Group Limited
No. 4531 Date: 09.07.31

LOCATIONS APPROVED
UNDERGROUND STRUCTURES
SIGNED BY:

SUPV U/G STRUCTURES DATE

LOCATION OF UNDERGROUND STRUCTURES AS SHOWN ARE BASED ON THE BEST INFORMATION AVAILABLE BUT NO GUARANTEE IS GIVEN THAT ALL EXISTING UTILITIES ARE SHOWN OR THAT THE GIVEN LOCATIONS ARE EXACT CONFIRMATION OF EXISTANCE AND EXACT LOCATION OF ALL SERVICES MUST BE OBTAINED FROM THE INDIVIDUAL UTILITIES BEFORE PROCEEDING

G.B.M. ELEV.

No.	REVISIONS	DATE	BY
1	ISSUED FOR ADDENDUM #2	09.08.18	JPL
0	ISSUED FOR TENDER	09.07.31	JPL

A-B / C
A = DETAIL/SECTION No.
B = DRAWING WHERE SHOWN
C = DRAWING WHERE TAKEN

METRIC
WHOLE NUMBERS INDICATE MILLIMETRES
DECIMALIZED NUMBERS INDICATE METRES

MMM GROUP
MMM Group Limited
Suite 111 - 93 Lombard Ave.
Winnipeg, MB R3B 3B1
t. 204.943.3178 | f. 204.943.4948
www.mmm.ca

DESIGNED BY	MLW	CHECKED BY	GK
DRAWN BY	RCS	APPROVED BY	JPL
HOR. SCALE	AS SHOWN	RELEASED FOR CONSTRUCTION	
VERT. SCALE	AS SHOWN	ORIGINAL SIGNED BY B.A. NEIRINCK	
DATE	-	DATE	JULY 31, 2009

ENGINEER'S SEAL
PROVINCE OF MANITOBA
J. P. LUKASHENKO
July 31/09
REGISTERED PROFESSIONAL ENGINEER

BID OPPORTUNITY
579-2009

Winnipeg
CITY OF WINNIPEG
PUBLIC WORKS DEPARTMENT

ALBANY STREET
CROSSING OF TRURO CREEK

GENERAL ARRANGEMENT

CONSULTANT DRAWING NUMBER
42088-S02

SHEET 4 OF 6

CITY DRAWING NUMBER
C340-09-04

NOTE:
These design documents are prepared solely for the use by the party with whom the design professional has entered into a contract and there are no representations of any kind made by the design professional to any party with whom the design professional has not entered into a contract.

Aug 18, 2009 – 10:52am
P:\42000 – 42099\42088 Albany Street Crossing of Truro Creek\Drawings\42088 albany S01 site plan S02 ga 090731.dwg –tab:S02