WO 101-84

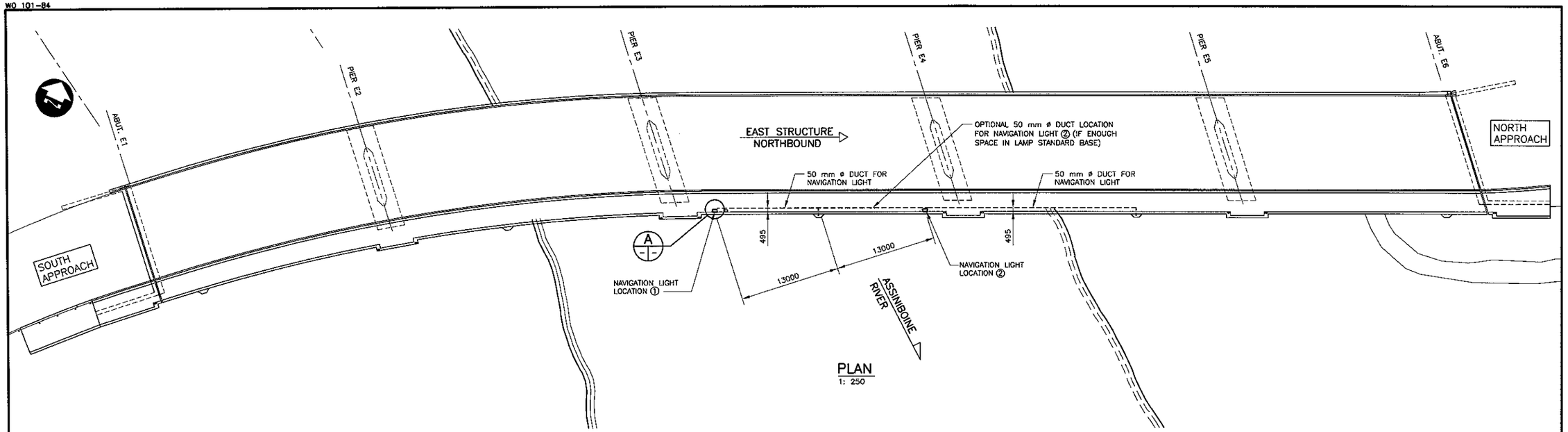

PLAN
1: 250

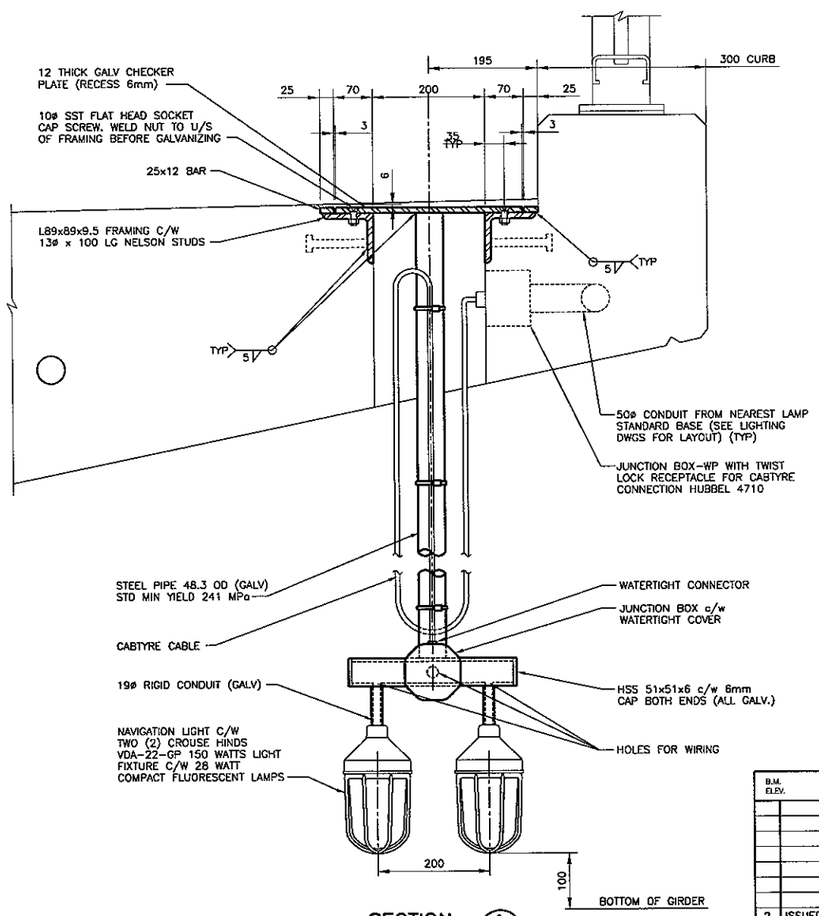

SECTION 1
1: 5

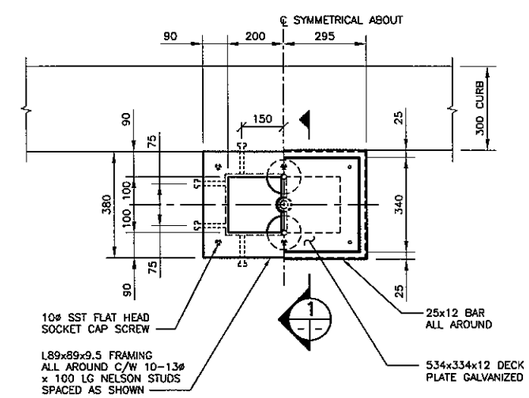

PLAN-DETAIL A
1: 10 (AT 2 LOCATIONS)

NOTES:

1. STEEL SHALL BE FABRICATED CONFORMING TO CSA G40.21-M92, GRADE 300W. STEEL SHALL BE HOT DIP GALVANIZED AFTER FABRICATION IN ACCORDANCE WITH CSA G164 TO A NET RETENTION OF 600 g/m2.
2. ALL FASTENERS, WASHERS, NUTS AND INSERTS SHALL BE STAINLESS STEEL.
3. DAMAGE TO GALVANIZED ITEMS SHALL BE REPAIRED USING "GALVALLOY" PROCEDURE.
4. JUNCTION BOX NOT SHOWN FOR CLARITY.
5. CONTRACTOR TO SUPPLY THE FOLLOWING STANDBY MATERIAL:
   i) SIX CLEAR GLOBES (G23)
   ii) TWO GUARDS (P20)
   iii) SIX 28-WATT COMPACT FLUORESCENT LAMPS.

NO.	REVISIONS	DATE	BY
2	ISSUED FOR TENDER	02/02/06	N.B.G.
1	ISSUED FOR CITY REVIEW	12/14/05	N.B.G.

B.M. ELEV.

DESIGNED BY R.A.W.
DRAWN BY N.B.G.
CHECKED BY R.A.W.
REVIEWED BY R.A.W
HOR. SCALE / VERTICAL AS NOTED
DATE DEC. 2005

DILLON CONSULTING

RELEASED FOR CONSTRUCTION
DATE 01-31-06

ENGINEER'S SEAL
PROVINCE OF MANITOBA R. A. WIEBE REGISTERED PROFESSIONAL ENGINEER
Jan 31/06

ENGINEER'S SEAL

CONSULTANT PROJECT NO.
05-5069-1000

Winnipeg

THE CITY OF WINNIPEG
PUBLIC WORKS DEPARTMENT

MARYLAND TWIN BRIDGES REHABILITATION PROJECT
EAST BRIDGE REHABILITATION

CITY DRAWING NUMBER B108-06-31
SHEET 31 OF 38

NAVIGATION LIGHTS
PLAN, SECTION AND DETAIL

400/LEON ACAD FILE: G:\CAD\(05069)\CONTRACT\TENDER\31_NAVIGATION_LIGHTS.DWG 01/30/06