SHEET: COW-A1 (05/2005)

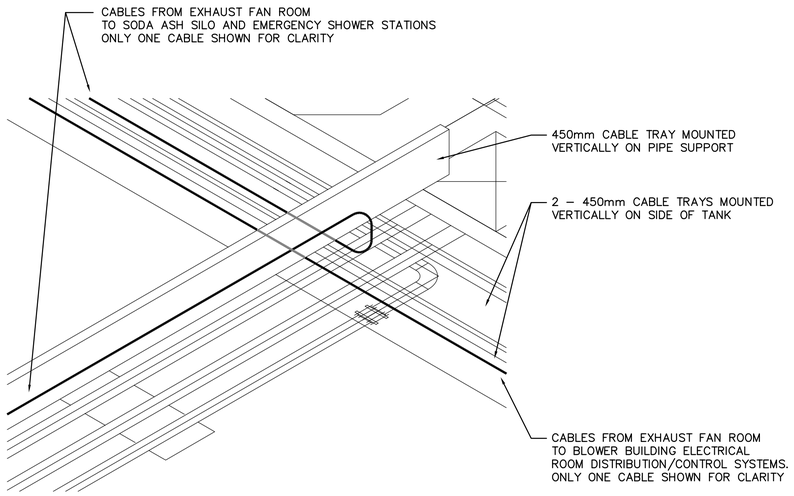

B E2.08 DETAIL – SODA ASH CABLE TRAY
SCALE 1:25

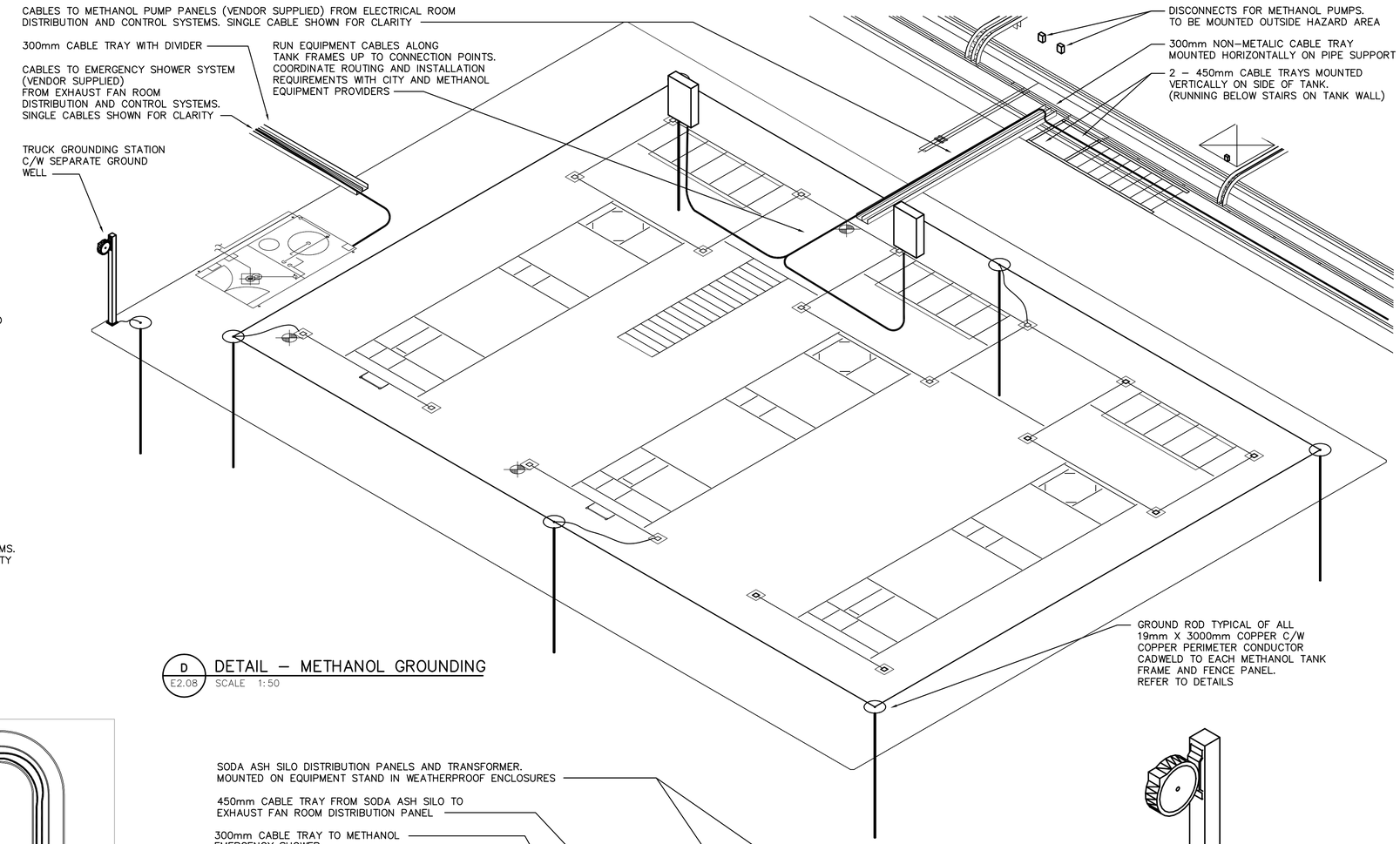

D E2.08 DETAIL – METHANOL GROUNDING
SCALE 1:50

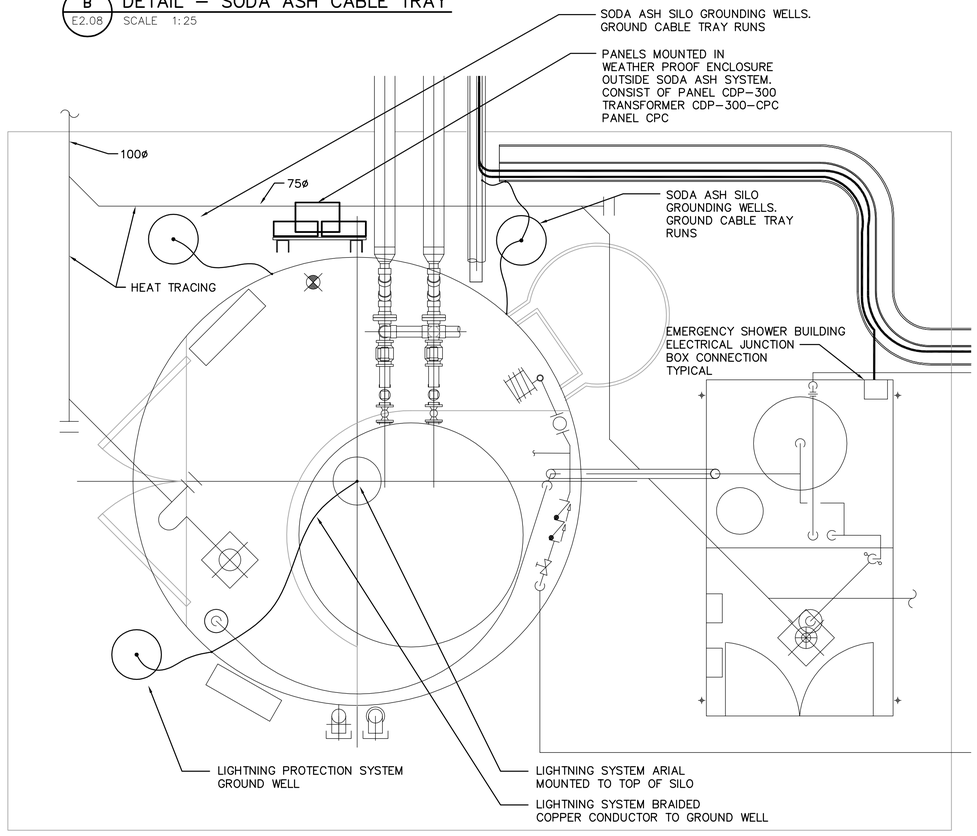

A E2.08 DETAIL – SODA ASH PLAN
SCALE 1:25

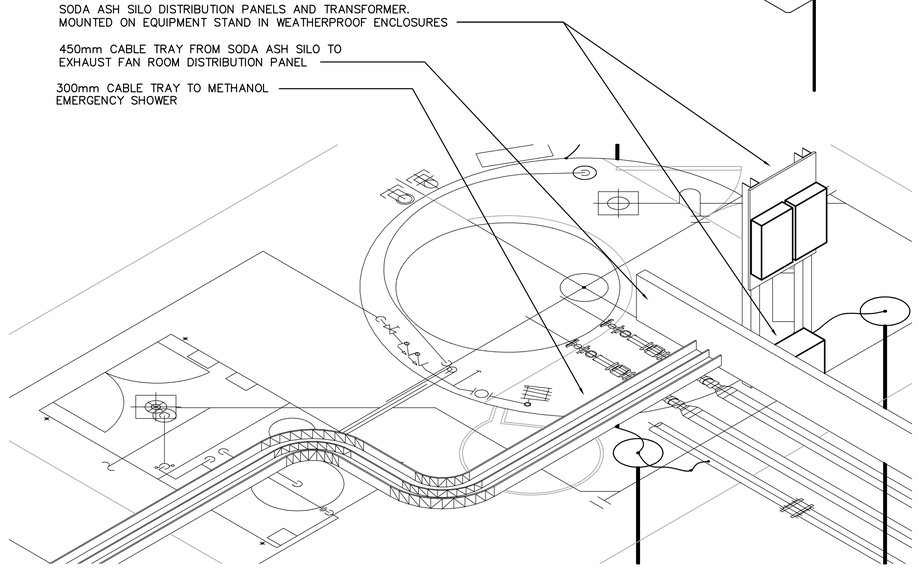

C E2.08 DETAIL – SODA ASH CABLE TRAY
SCALE 1:25

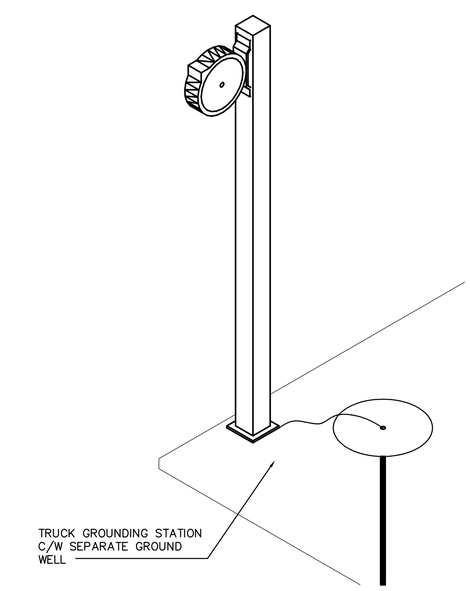

E E2.08 DETAIL – METHANOL TRUCK GROUNDING
SCALE N.T.S.

APEGM
Certificate of Authorization
Earth Tech Canada Inc.
No. 730 Expiry: April 30, 2007

B.M. ELEV.

NO.	REVISIONS	DATE	BY
01	291–2006 ADDENDUM 3	06/07/12	CPG
00	ISSUED FOR TENDER	06/05/15	CPG

EarthTech
A Tyco International Ltd. Company

DESIGNED BY	PS	CHECKED BY	GSN
DRAWN BY	CPG	APPROVED BY	JEH
SCALE:		RELEASED FOR CONSTRUCTION BY:	K. MARTENS
DATE	2006/04/28	DATE	2006/05/23

ENGINEER'S SEAL
ORIGINAL SIGNED BY
P. STRYK
2005/05/15

CONSULTANT DRAWING NO.
E2.08

Winnipeg
THE CITY OF WINNIPEG
WATER AND WASTE DEPARTMENT
ENGINEERING DIVISION

NEWPCC CENTRATE NUTRIENT TREATMENT
NITROGEN REMOVAL FACILITY

CITY FILE NUMBER
SHEET OF

ELECTRICAL
EYEWASH, SODA ASH
AND METHANOL GROUNDING

CITY DRAWING NUMBER

Last Save: 2006–07–11 1:56 PM

L:\WORK\66000\66303CEN\02A–CAD\ELEC\CONTR\NITROGEN REMOVAL\E2.08.DWG