SHEET: COW-A1 (03/2005)

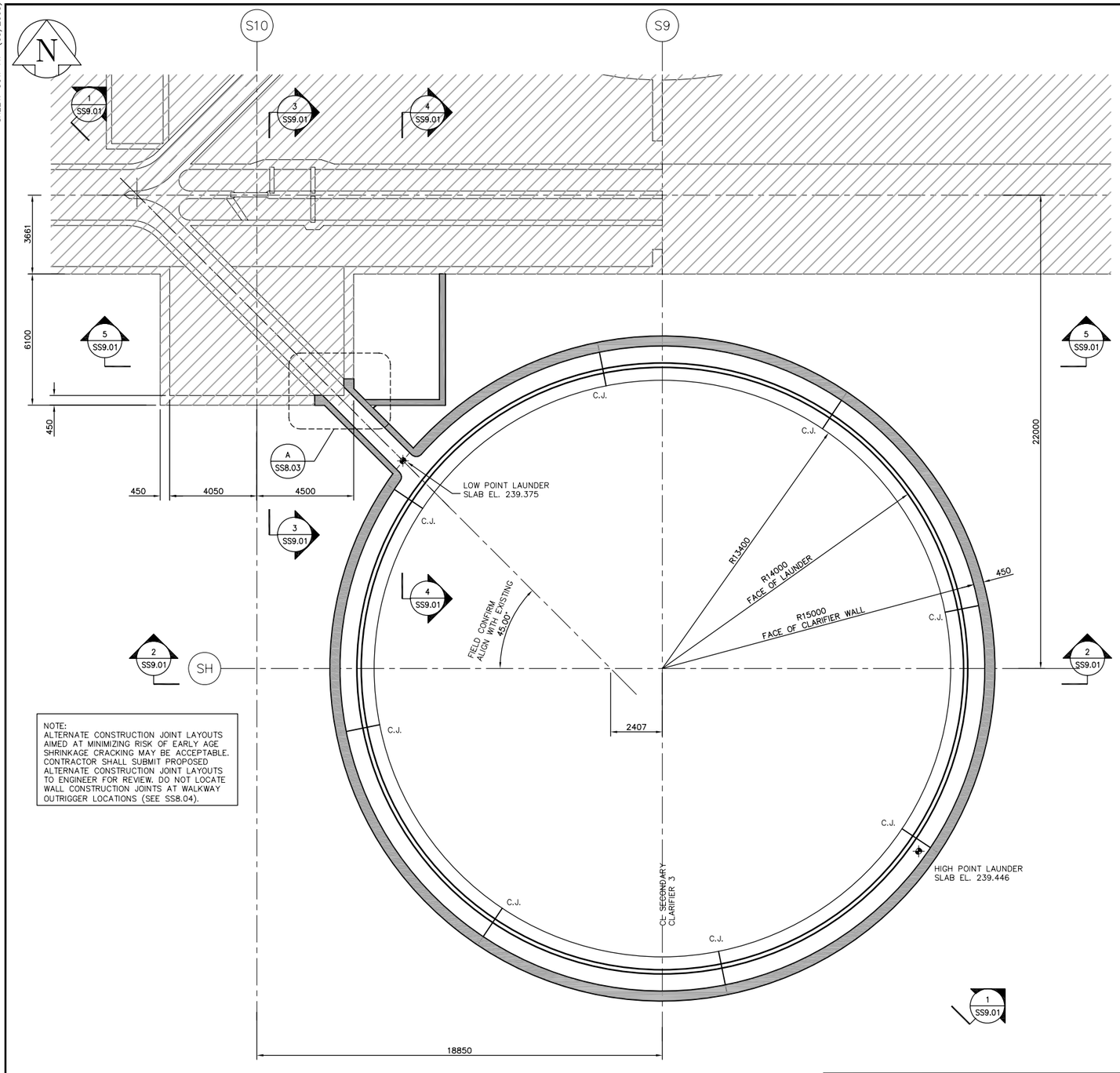

NOTE:
ALTERNATE CONSTRUCTION JOINT LAYOUTS AIMED AT MINIMIZING RISK OF EARLY AGE SHRINKAGE CRACKING MAY BE ACCEPTABLE. CONTRACTOR SHALL SUBMIT PROPOSED ALTERNATE CONSTRUCTION JOINT LAYOUTS TO ENGINEER FOR REVIEW. DO NOT LOCATE WALL CONSTRUCTION JOINTS AT WALKWAY OUTRIGGER LOCATIONS (SEE SS8.04).

EFFLUENT LEVEL FRAMING PLAN
SCALE : 1:100

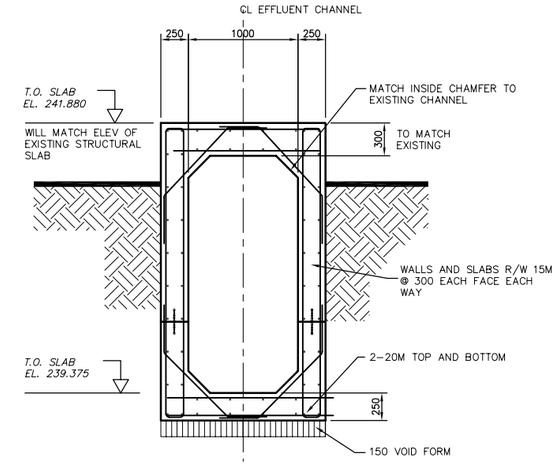

B SS8.03 DETAIL 1:25

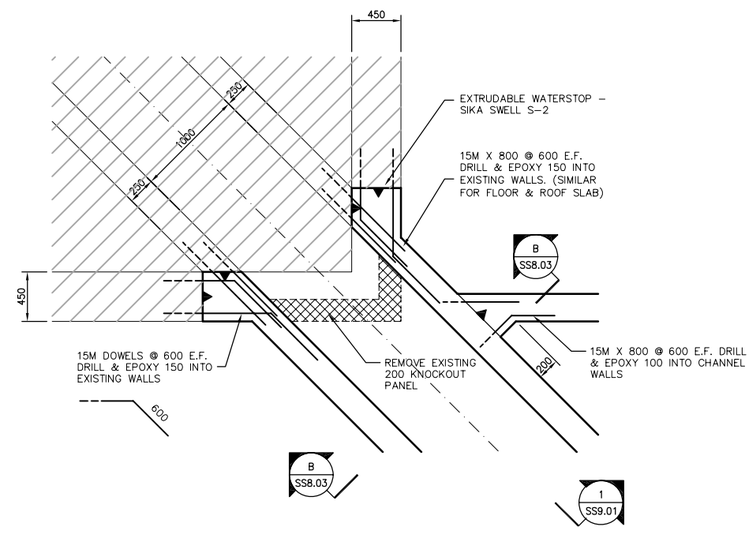

A SS8.03 DETAIL 1:25

NOTE:
CHANNEL REINFORCING
NOT SHOWN FOR CLARITY

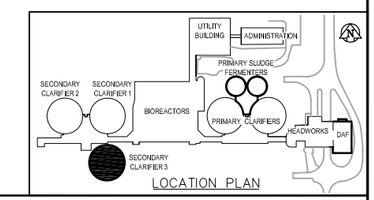

LOCATION PLAN

APEGM
Certificate of Authorization
Earth Tech Canada Inc.
No. 730 Expiry: April 30, 2006

B.M. ELEV.			
00	ISSUED FOR TENDER	06/04/26	NV
NO.	REVISIONS	DATE	BY

EarthTech
A Tyco International Ltd. Company

DESIGNED BY	CJG	CHECKED BY	CJG
DRAWN BY	NV	APPROVED BY	JEH
HOR. SCALE: VERTICAL SCALE:	AS NOTED	RELEASED FOR CONSTRUCTION BY:	J.VEILLEUX
DATE	2006/03/10	DATE	2006/04/26

ENGINEER'S SEAL
ORIGINAL SIGNED BY
C.J. GENTILE
2006/04/25

CONSULTANT DRAWING NO.
SS8.03

Winnipeg
THE CITY OF WINNIPEG
WATER AND WASTE DEPARTMENT
ENGINEERING DIVISION

WEWPCC
BIOLOGICAL NUTRIENT REMOVAL UPGRADE
CONTRACT No. 3

CITY FILE NUMBER
SHEET OF

STRUCTURAL
AREA S – SECONDARY CLARIFIER 3
EFFLUENT LEVEL FRAMING PLAN

CITY DRAWING NUMBER

04/26/06 03:16pm norm.villeneuve L:\work\76000\76063\02a-CAD\IND\Contr\Fermentor-Clarifier\SS8.03.dwg Layout:Layout1