SHEET: COW-A1 (03/2005)

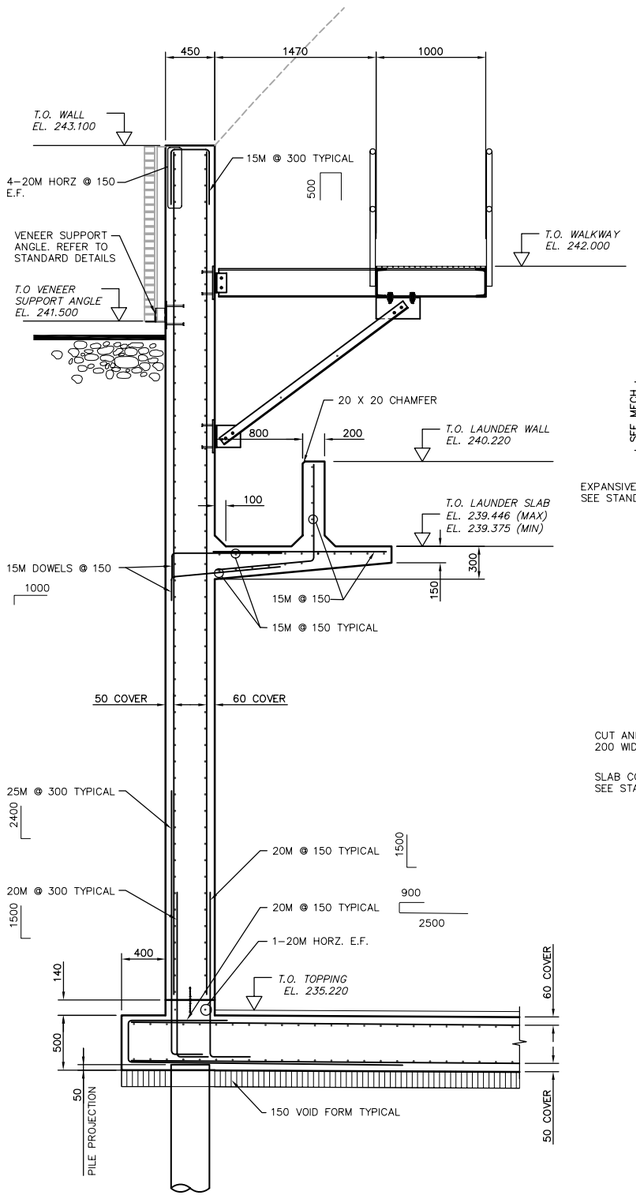

A SS9.01 DETAIL 1:25

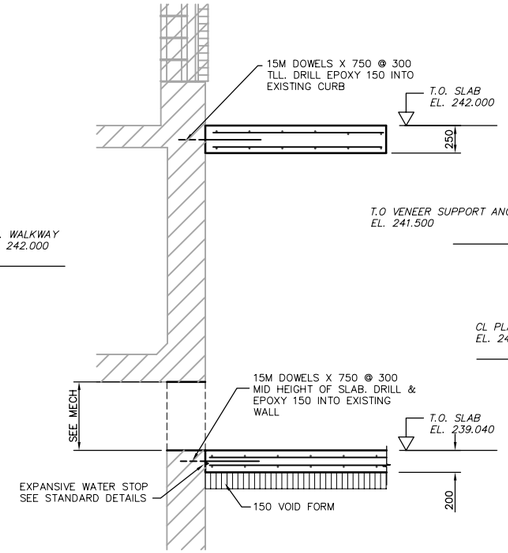

C SS9.01 DETAIL 1:25

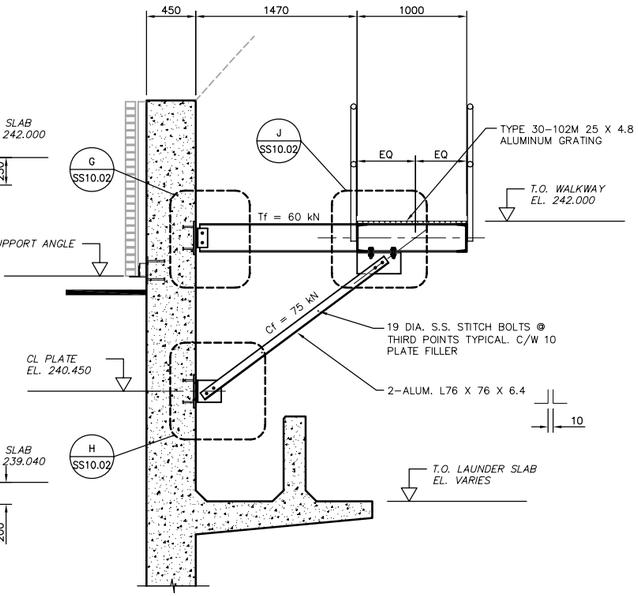

E SS8.04 TYPICAL OUTRIGGER DETAIL 1:25

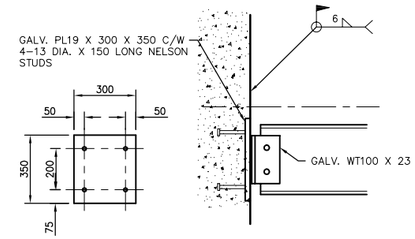

G SS10.02 DETAIL 1:10

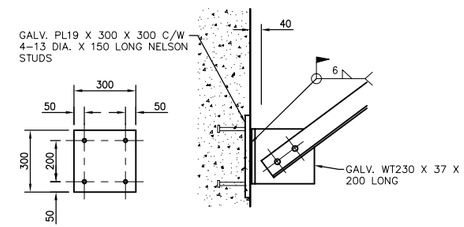

H SS10.02 DETAIL 1:10

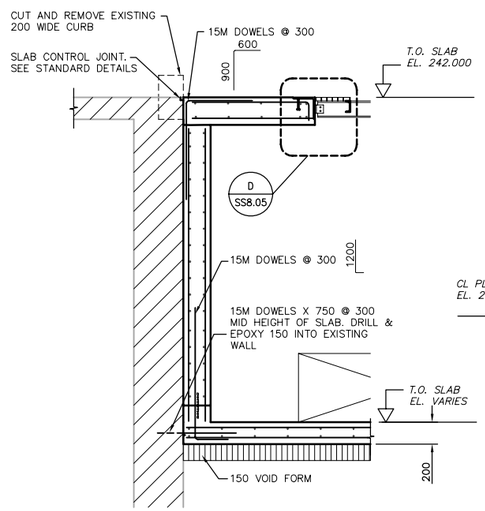

D SS9.01 DETAIL 1:25

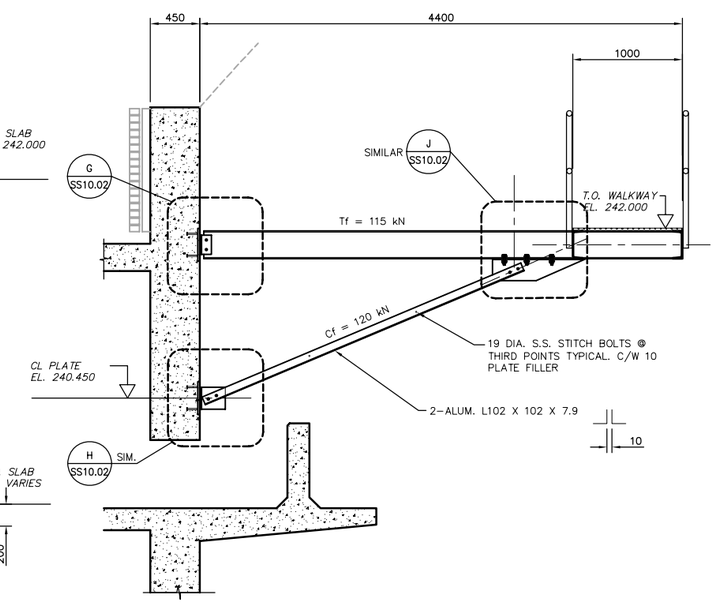

F SS8.04 OUTRIGGER BESIDE BRIDGE DETAIL 1:25

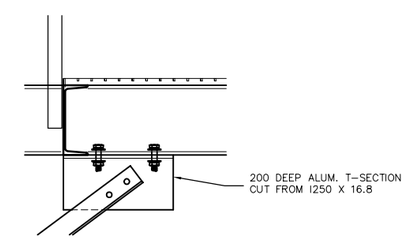

J SS10.02 DETAIL 1:10

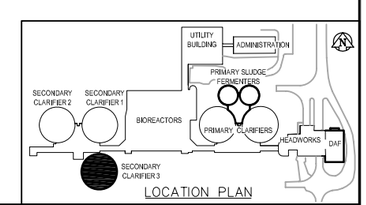

LOCATION PLAN

APEGM
Certificate of Authorization
Earth Tech Canada Inc.
No. 730 Expiry: April 30, 2006

NO.	REVISIONS	DATE	BY
00	ISSUED FOR TENDER	06/04/26	NV

B.M.
ELEV.

EarthTech
A Tyco International Ltd. Company

DESIGNED BY CJG	CHECKED BY CJG
DRAWN BY NV	APPROVED BY JEH
HOR. SCALE: AS NOTED VERTICAL SCALE:	RELEASED FOR CONSTRUCTION BY: J.VEILLEUX
DATE 2006/03/10	DATE 2006/04/26

ENGINEER'S SEAL
ORIGINAL SIGNED BY
C.J. GENTILE
2006/04/25

CONSULTANT DRAWING NO.
SS10.02

Winnipeg
THE CITY OF WINNIPEG
WATER AND WASTE DEPARTMENT
ENGINEERING DIVISION

WEWPCC
BIOLOGICAL NUTRIENT REMOVAL UPGRADE
CONTRACT No. 3

STRUCTURAL
AREA S – SECONDARY CLARIFIER 3
SECTIONS AND DETAILS

CITY FILE NUMBER
SHEET OF
CITY DRAWING NUMBER

04/26/06 03:14pm norm.villeneuve L:\work\76000\76063\02a-CAD\IND\Contr\Fermentor-Clarifier\SS10.02.dwg Layout:Layout1