SHEET: COW-A1 (03/2005)

NOTES:

1. THIS DRAWING SCHEMATICALLY INDICATES THE FLUSHING WATER SYSTEM.
2. SERVICE PIPING IS SHOWN ON THIS DRAWING TO THE VICINITY OF THE EQUIPMENT BEING SERVED.
3. REFER TO THE PROCESS AND INSTRUMENTATION DIAGRAMS FOR THE CONTINUATION OF THE SERVICE PIPING BEYOND THE POINTS SHOWN ON THIS DRAWING. PROVIDE ALL PIPING, FITTINGS, VALVES ETC. TO PROVIDE A COMPLETE AND OPERATIONAL SERVICE PIPING SYSTEM.
4. WHEREVER POSSIBLE, SERVICE PIPING HAS BEEN INDICATED ON THE PROCESS/MECHANICAL DRAWINGS. HOWEVER, BECAUSE SOME OF THE PIPING, FITTINGS AND VALVING IS SMALL IN SIZE, NO ATTEMPT HAS BEEN MADE TO INDICATE THE COMPLETE SYSTEMS IN THE PROCESS/MECHANICAL DRAWINGS. REFER TO STANDARD PROCESS/MECHANICAL AND INSTRUMENTATION DRAWINGS FOR ADDITIONAL INFORMATION.
5. VALVES ON THE SERVICE PIPING SYSTEM SHALL BE LOCATED IN THE FIELD.

AREA S – SECONDARY CLARIFIERS

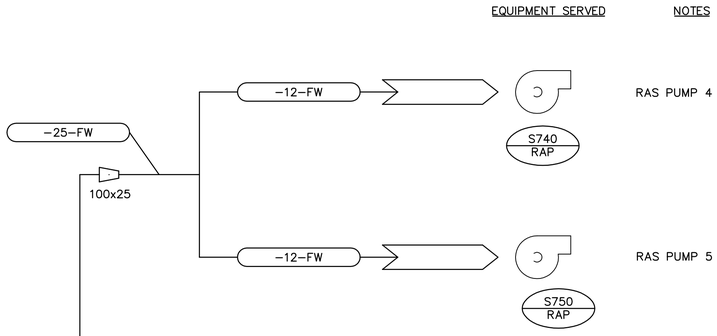

AREA S – BIOREACTORS

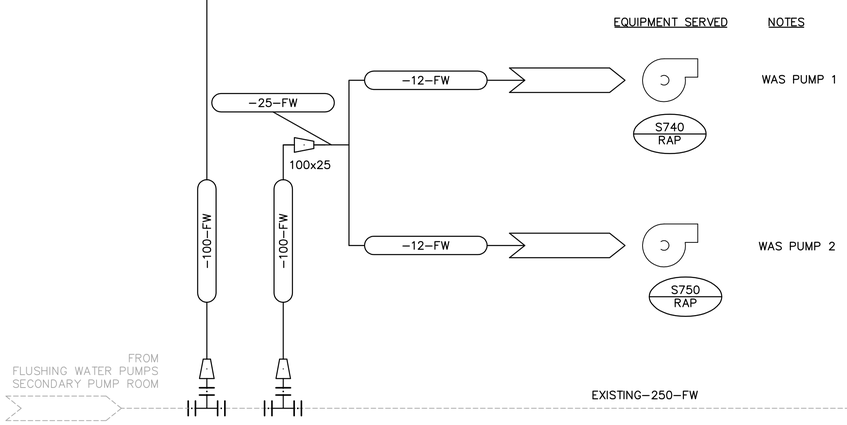

AREA F – FERMENTERS

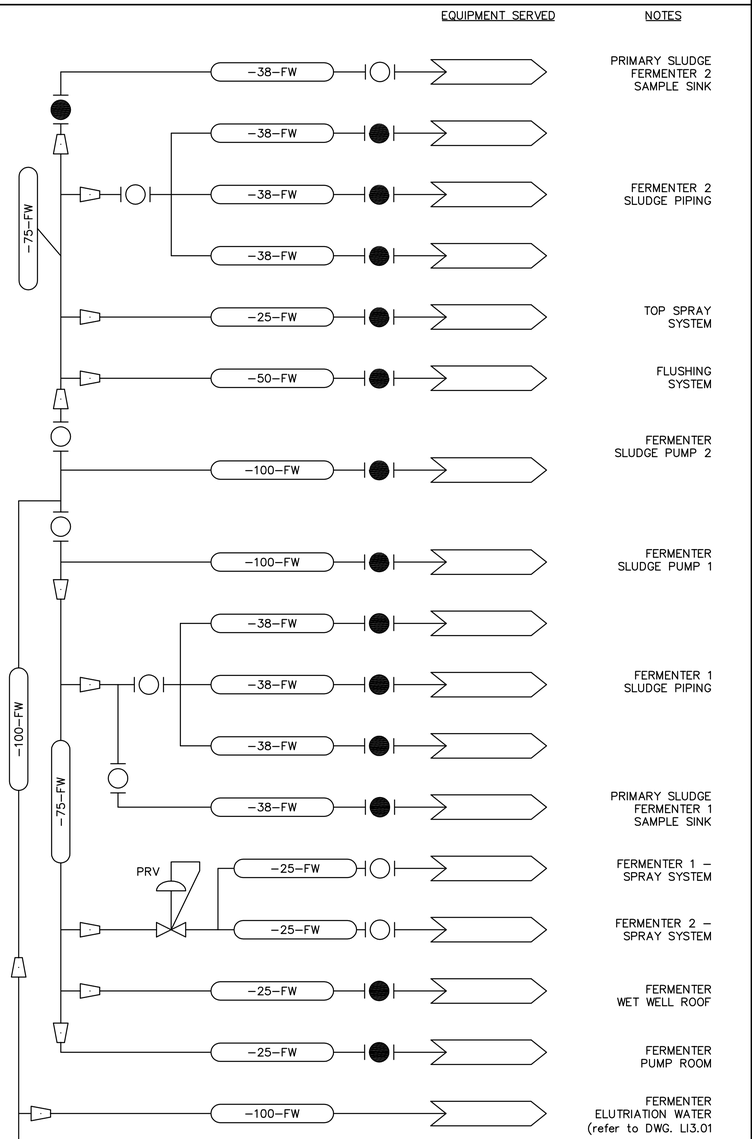

AREA T – DAF THICKENERS

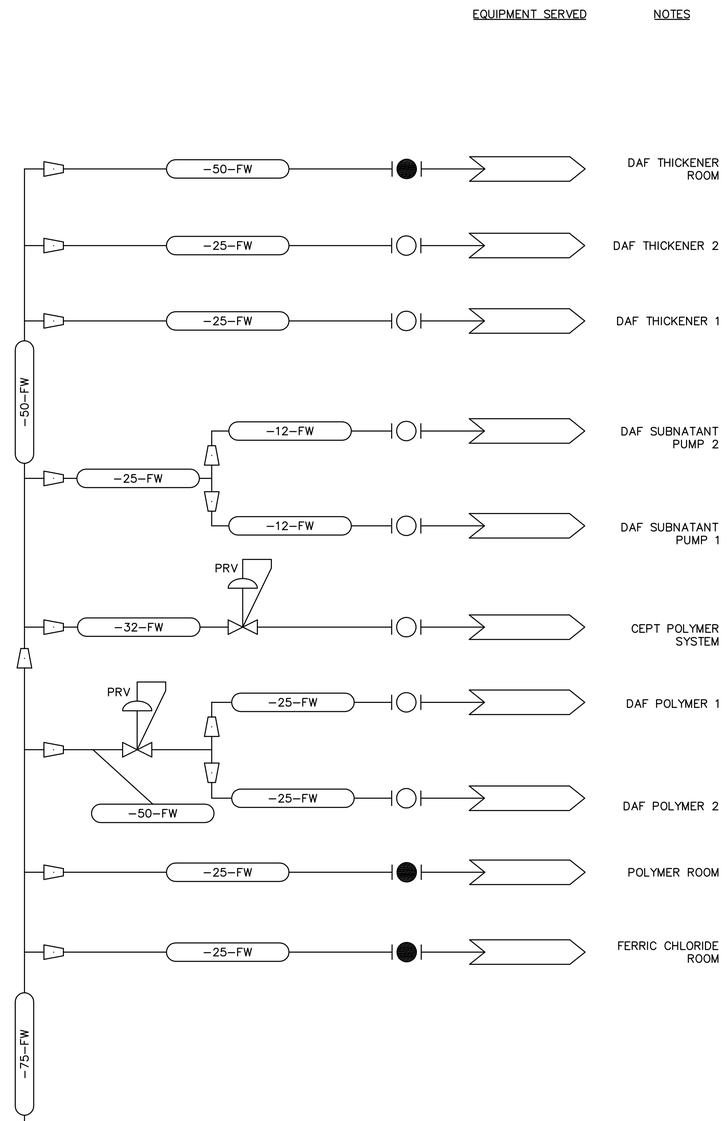

AREA P – PRIMARY CLARIFIERS

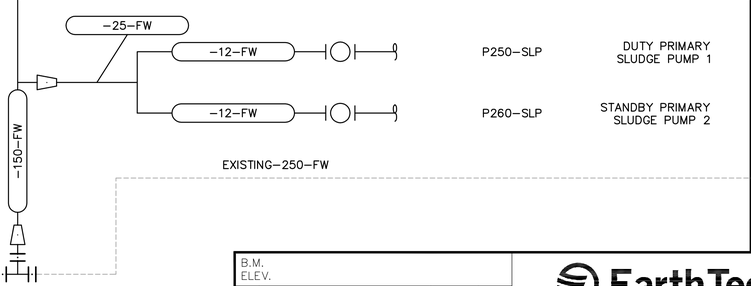

AREA H – HEADWORKS

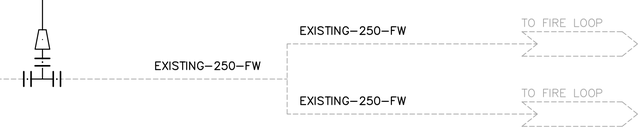

APEGM
Certificate of Authorization
Earth Tech Canada Inc.
No. 730 Expiry: April 30, 2006

B.M.
ELEV.

NO.	REVISIONS	DATE	BY
00	ISSUED FOR TENDER	06/04/26	SRP

EarthTech
A Tyco International Ltd. Company

DESIGNED BY	YL/CL	CHECKED BY	CL
DRAWN BY	RCK	APPROVED BY	JEH
HOR. SCALE: VERTICAL SCALE:	NONE	RELEASED FOR CONSTRUCTION BY:	J. VEILLEUX
DATE	2006/01/26	DATE	2006/04/26

ENGINEER'S SEAL
ORIGINAL SIGNED BY
J.E. HUTCHISON
2006/04/26

CONSULTANT DRAWING NO.
LP3.01

Winnipeg
THE CITY OF WINNIPEG
WATER AND WASTE DEPARTMENT
ENGINEERING DIVISION

WEWPCC
BIOLOGICAL NUTRIENT REMOVAL UPGRADE
CONTRACT 3

CITY FILE NUMBER
SHEET OF

PROCESS
AREA L – GENERAL & SITEWORKS
FLUSHING WATER SCHEMATIC

CITY DRAWING NUMBER