SHEET: COW-A1 (03/2005)

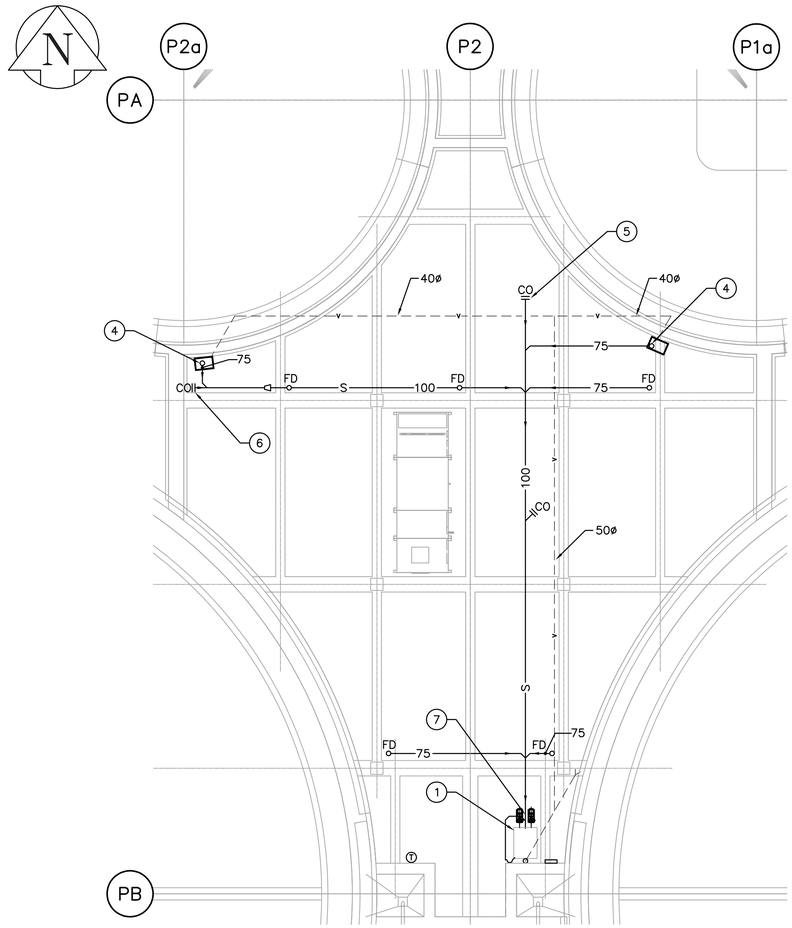

FOUNDATION PLUMBING PLAN
SCALE: 1:100

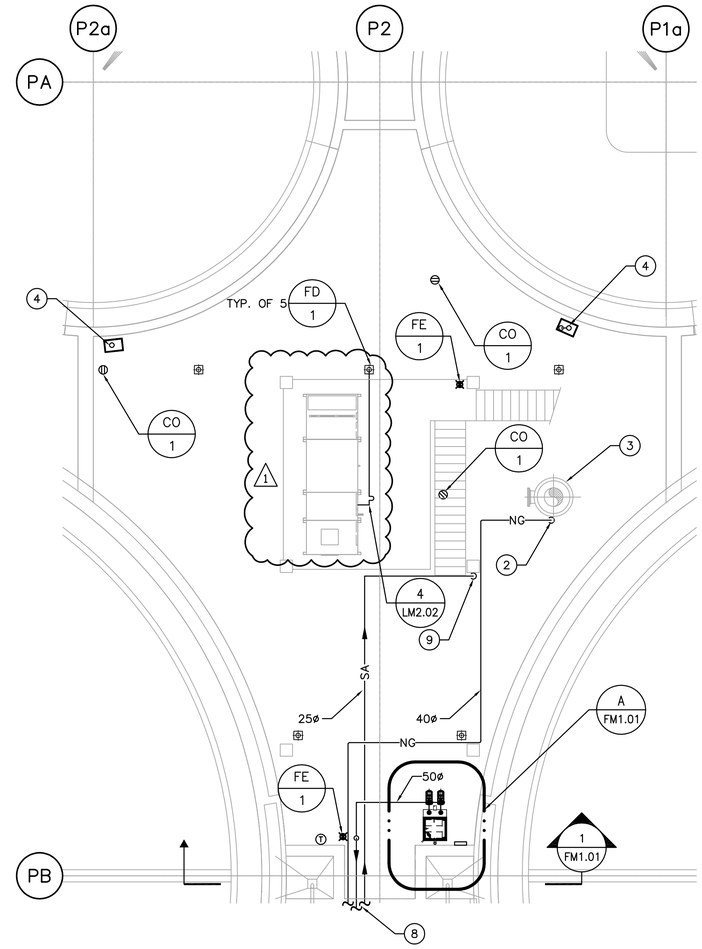

LOWER LEVEL PLUMBING PLAN
SCALE: 1:100

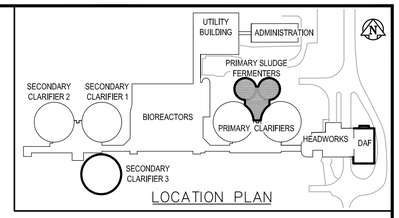

LOCATION PLAN

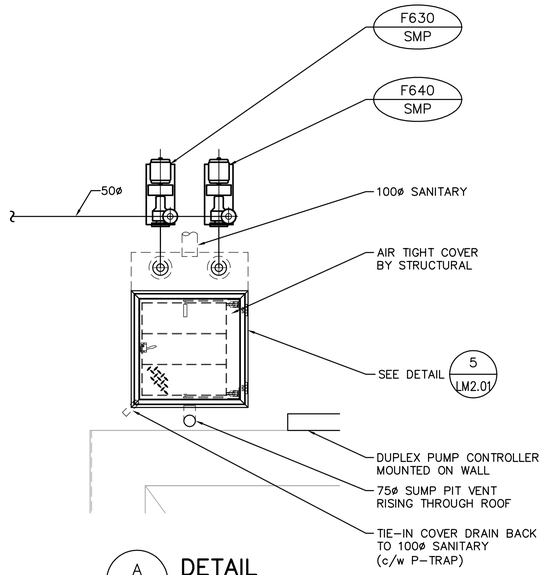

A / FM1.01 **DETAIL**
SCALE 1:20

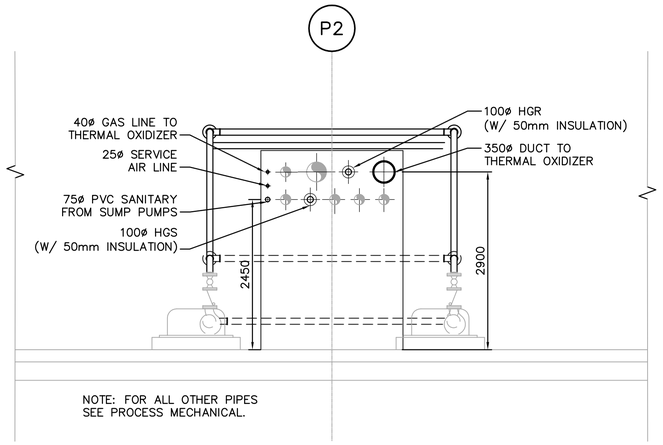

1 / FM1.01 **SECTION – PIPE & DUCT PENETRATION LOCATION**
SCALE 1:50

DRAWING NOTES

1. 1012Lx762Wx2500 DEEP SUMP PIT.
2. LOCATED GAS COCK AND PRESSURE REDUCER NEAR F661-TO.
3. PROCESS MECHANICAL THERMAL OXIDIZER.
4. 50ø SANITARY SERVING DIVISION II SERVICE SINK (SK-1).
5. SANITARY LINE EL. INV: 235.676.
6. SANITARY LINE EL. INV: 235.757.
7. SANITARY LINE EL. INV: 235.506.
8. SEE DRAWING PM1.01 FOR CONTINUATION.
9. RUN SERVICE AIR LINE DOWN ON MEZZANINE SUPPORT COLUMN. SEE DRAWING LM2.02 FOR SERVICE AIR CONNECTION DETAIL.
10. FIRE EXTINGUISHER LOCATED ON MEZZANINE LEVEL.

GENERAL NOTES

1. COORDINATE WITH OTHER TRADES SO AS TO PREVENT CONFLICTS.
2. ALL SANITARY PIPE 75ø AND SMALLER SHALL BE SLOPED AT 2%.
3. ALL SANITARY PIPE 100ø AND LARGER SHALL BE SLOPED AT 1%.

APEGM
Certificate of Authorization
Earth Tech Canada Inc.
No. 730 Expiry: April 30, 2006

B.M.
ELEV.

NO.	REVISIONS	DATE	BY
01	21-2006 ADDENDUM 3	06/05/19	LJW
00	ISSUED FOR TENDER	06/04/26	DC

EarthTech
A Tyco International Ltd. Company

DESIGNED BY	DC	CHECKED BY	PVL
DRAWN BY	DC	APPROVED BY	JEH
HOR. SCALE: VERTICAL SCALE:	AS NOTED	RELEASED FOR CONSTRUCTION BY:	J. VEILLEUX
DATE	2005/12/19	DATE	2006/04/26

ENGINEER'S SEAL
ORIGINAL SIGNED BY
A. BURACHYNSKY
2006/04/26

CONSULTANT DRAWING NO.
FM1.01

Winnipeg
THE CITY OF WINNIPEG
WATER AND WASTE DEPARTMENT
ENGINEERING DIVISION

WEWPCC
BIOLOGICAL NUTRIENT REMOVAL UPGRADE
CONTRACT 3

CITY FILE NUMBER
SHEET OF

MECHANICAL
AREA F – PRIMARY SLUDGE FERMENTERS
PLUMBING PLANS & SECTION

CITY DRAWING NUMBER

05/16/06 02:27pm ding.chan L:\work\76000\76063\02a-CAD\MEC\CONTR\Fermenter-clarifier\FM1.01.dwg Layout:FM1.01