BEAVERBROOK STREET

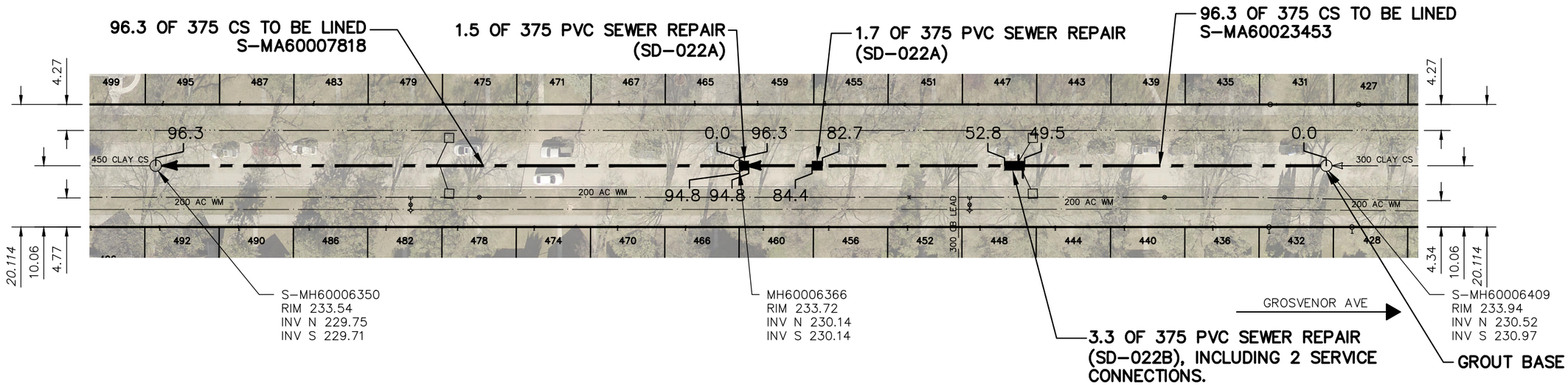

SEWER JUNCTION INFORMATION FROM SEWER VIDEO INSPECTION SEWER ID S-MA60023453		
DISTANCE FROM MH ID S-MH60006366		
DISTANCE	DIAMETER	CLOCK
1.5	150	11
2.1	150	1
12.2	150	10
13.0	150	2
23.9	150	10
24.6	150	2
35.5	250	2
****REVERSAL REQUIRED****		

SEWER JUNCTION INFORMATION FROM SEWER VIDEO INSPECTION SEWER ID S-MA60023453		
DISTANCE FROM MH ID S-MH60006409		
DISTANCE	DIAMETER	CLOCK
9.2	150	11
9.9	150	2
21.7	150	11
22.5	150	2
23.3	150	10
34.1	150	11
35.0	150	2
45.8	150	10
46.7	150	1
49.8	150	10
50.5	150	2
58.4	150	10
59.0	150	2
59.9	250	10
****REVERSAL REQUIRED****		

SEWER JUNCTION INFORMATION FROM SEWER VIDEO INSPECTION SEWER ID S-MA60007818		
DISTANCE FROM MH ID S-MH60006366		
DISTANCE	DIAMETER	CLOCK
11.6	150	2
23.2	150	11
24.1	150	2
35.7	150	11
36.5	150	1
48.2	150	11
49.0	150	2
49.6	250	10
50.5	250	2
55.9	150	11
59.9	150	11
60.5	150	1
72.3	150	10
73.0	150	2
80.1	150	10
84.8	150	10
85.6	150	2

WARNING

IF POWER EQUIPMENT OR EXPLOSIVES ARE TO BE USED FOR EXCAVATION ON THIS PROJECT THE CONTRACTOR MUST:

1) NOTIFY THE GAS COMPANY OF THE PROPOSED LOCATION OF EXCAVATION.

2) TAKE PRECAUTION TO AVOID DAMAGE TO GAS COMPANY INSTALLATIONS.

SEE PROVINCIAL REGULATION 210/72 FOR DETAILS

FOR INDEX SEE 12443

METRIC
WHOLE NUMBERS INDICATE MILLIMETRES
DECIMALIZED NUMBERS INDICATE METRES

0.0 10.0 20.0 30.0 40.0

LOCATION APPROVED
UNDERGROUND STRUCTURES

SUPV. U/G STRUCTURES COMMITTEE — DATE

NOTE:

LOCATION OF UNDERGROUND STRUCTURES AS SHOWN ARE BASED ON THE BEST INFORMATION AVAILABLE BUT NO GUARANTEE IS GIVEN THAT ALL EXISTING UTILITIES ARE SHOWN OR THAT THE GIVEN LOCATIONS ARE EXACT. CONFIRMATION OF EXISTENCE AND EXACT LOCATION OF ALL SERVICES MUST BE OBTAINED FROM THE INDIVIDUAL UTILITIES BEFORE PROCEEDING WITH CONSTRUCTION.

B.M.
ELEV.

NO.	REVISIONS	DATE	BY

DESIGNED BY	SC	CHECKED BY	SC
DRAWN BY	RS	APPROVED BY	KZ
SCALE: HORIZONTAL	1:750	RELEASED FOR CONSTRUCTION	
VERTICAL			K. ZUREK
DATE	2020 04 23	DATE	2020-04-22

PLOT DATE: 2020 04 23

ENGINEER'S SEAL

ORIGINAL SIGNED BY S.R.J. COURNOYER 2020/04/17

CONSULTANT DRAWING NUMBER
–

BID OPPORTUNITY: 197-2020
CONTRACT NUMBER: 6

Winnipeg

THE CITY OF WINNIPEG
WATER AND WASTE DEPARTMENT
ENGINEERING DIVISION

2020 SEWER MAIN RENEWALS
BY AUGMENTATION

BEAVERBROOK STREET

1ST MH S OF GROSENVOR AVENUE TO
3RD MH S OF GROSENOR AVENUE

SHEET 8 OF 60

CITY DRAWING NUMBER
12449

FILE PATH: R:\DRAWINGS\SEWER\2019 RENEWALS\RENEWALS & ASSOCIATED WORKS\2019 supplementals\CONTRACT #6\Construction Dwg\SIGNED CONSTRUCTION DRAWINGS\
FILE NAME: 197-2020_Drawing_D-12449-R0.dwg