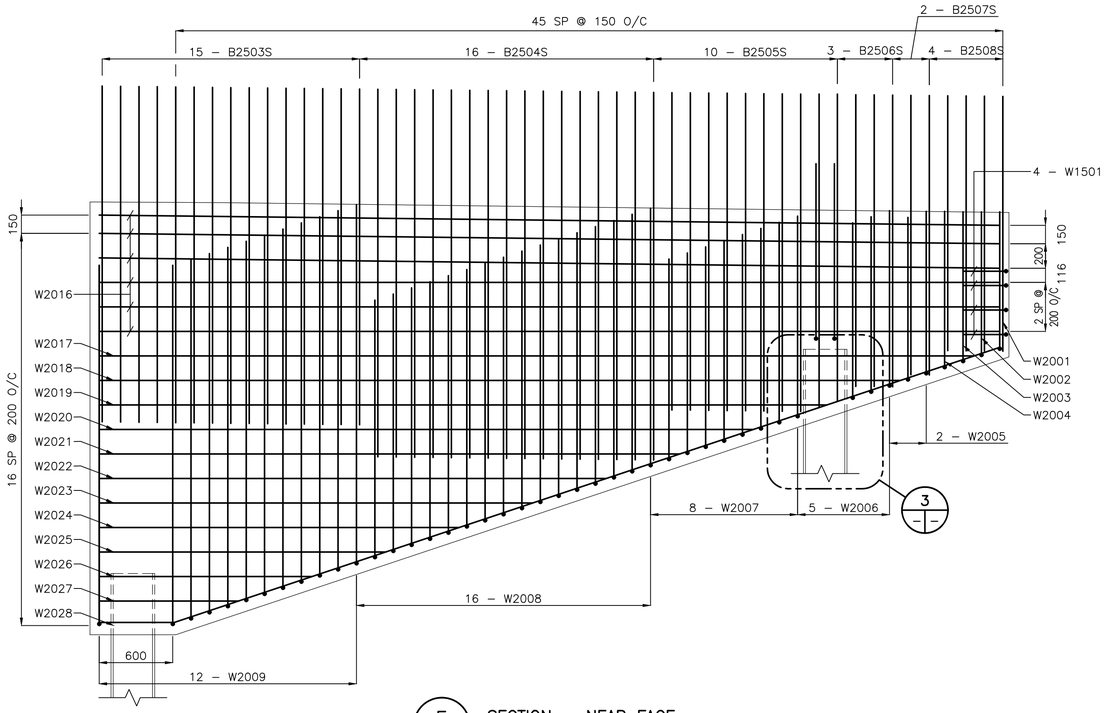

F 9|10 SECTION – NEAR FACE
1:25

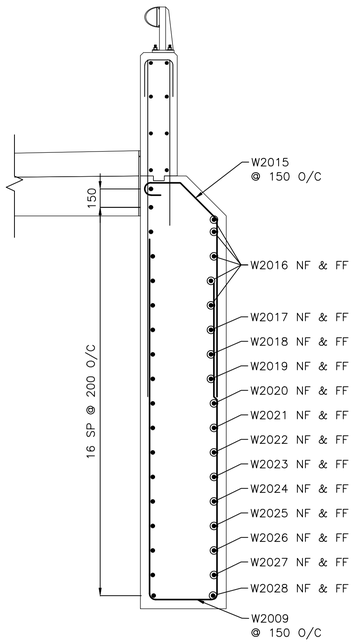

G 9|10 SECTION
1:25

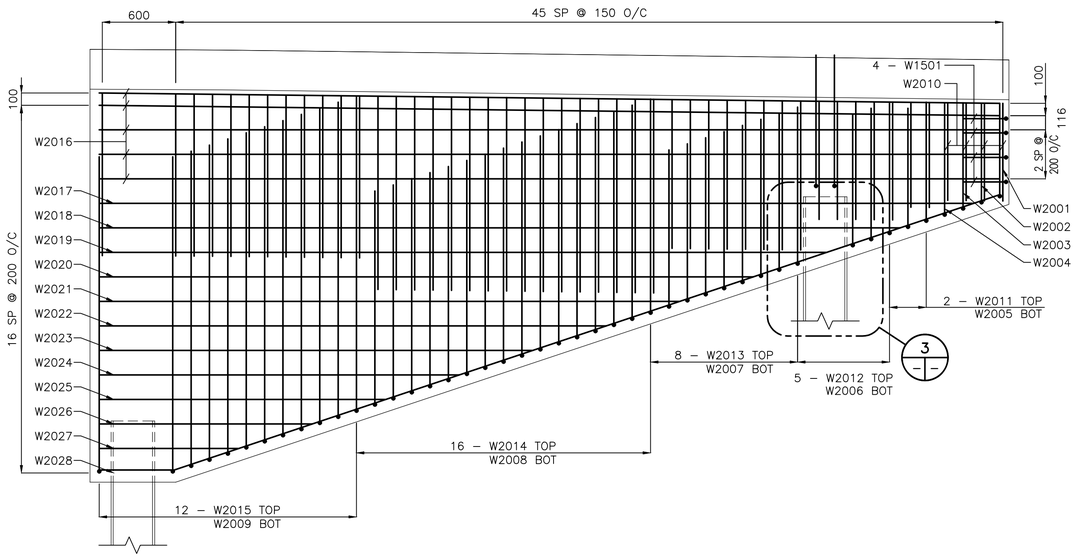

F 9|10 SECTION – FAR FACE
1:25

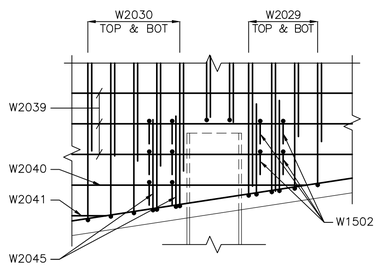

2 9|10 DETAIL
1:20

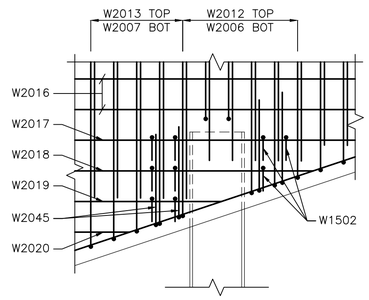

3 – – DETAIL
1:20

BILL OF REINFORCING STEEL

TOTAL ABUTMENTS

STRAIGHT BARS				BENT BARS										
MARK	QTY.	LENGTH (mm)	MASS (kg)	MARK	QTY.	TYPE	A	B	C	D	E	F	LENGTH (mm)	MASS (kg)
A2004	92	8000	1733.3	A1501	176	B	550						830	229.3
A2005	88	6000	1243.4	A1502	26	F	2042	800	800				3642	148.7
A2006	16	3060	115.3											
A2007	16	3845	144.9	A2001	88	A	550	450	450				1450	300.5
A2008	14	5060	166.8	A2002	36	E	800	800					1600	135.6
A2009	14	5845	192.7	A2003	36	E	800	1615					2415	204.7
A2010	12	2235	63.2											
				A2501	170	A	550	1500	1500				3550	2368.7
				A2502	132	A	550	2550	2550				5650	2927.3
				A2503	16	A	550	3080	3080				6710	421.4
				A2504	20	A	550	2050	2050				5150	404.3
				A2505	2	A	550	2580	2580				6210	48.7

TOTAL MASS OF BLACK STEEL REINFORCING FOR TWO (2) ABUTMENTS = 10,848.8 kg

TOTAL WINGWALLS

STRAIGHT BARS				BENT BARS										
MARK	QTY.	LENGTH (mm)	MASS (kg)	MARK	QTY.	TYPE	A	B	C	D	E	F	LENGTH (mm)	MASS (kg)
W2016	22	7350	380.8	W1501	20	A	550	300	300				1150	36.1
W2017	4	7213	67.9	W1502	38	B	550						830	49.5
W2018	4	6613	62.3											
W2019	4	6013	56.6	W2001	2	A	550	1125	770				2445	11.5
W2020	4	5413	51.0	W2002	2	A	550	1180	820				2550	12.0
W2021	4	4813	45.3	W2003	2	A	550	1230	875				2655	12.5
W2022	4	4213	39.7	W2004	2	A	550	1285	925				2760	13.0
W2023	4	3613	34.0	W2005	4	A	550	1335	980				2865	27.0
W2024	4	3013	28.4	W2006	10	A	550	1440	1080				3070	72.3
W2025	4	2413	22.7	W2007	16	A	550	1645	1290				3485	131.3
W2026	4	1813	17.1	W2008	32	A	550	2110	1755				4415	332.7
W2027	4	1213	11.4	W2009	24	A	550	2940	2580				6070	343.1
W2032	4	5990	56.4	W2010	8	C	800	355	300				1655	31.2
W2033	4	515	4.9	W2011	4	C	860	355	300				1715	16.2
W2034	4	1200	11.3	W2012	10	C	965	355	300				1820	42.9
W2035	4	2340	22.0	W2013	16	C	1220	355	300				2075	78.2
W2036	4	3480	32.8	W2014	32	C	1585	355	300				2440	183.9
W2037	4	4393	41.4	W2015	24	C	1330	355	300				2185	123.5
W2038	4	5305	50.0	W2028	4	D	613	7100					7713	72.7
W2039	24	5850	330.6	W2029	36	A	550	1155	1155				2860	242.5
W2040	4	5160	48.6	W2030	48	A	550	1545	1545				3640	411.5
W2041	4	3850	36.3	W2031	76	A	550	2075	2075				4700	841.2
W2042	4	2540	23.9	W2045	16	A	550	600	600				1750	65.9
W2043	4	1230	11.6											
W2044	4	5918	55.7											

TOTAL MASS OF BLACK STEEL REINFORCING FOR FOUR (4) WINGWALLS = 4,693.4 kg

BAR TYPES

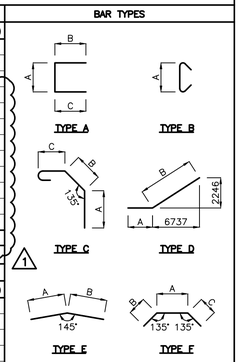

NOTE:

1. ALL DIMENSIONS GIVEN IN BENDING DIAGRAM ARE OUT TO OUT, EXCEPT RADII WHICH ARE INSIDE DIMENSIONS. ALL REINFORCING STEEL BENDS AND HOOKS SHALL CONFORM TO CLAUSE 6.6.2 OF C.S.A. A23.1–19, UNLESS NOTED OTHERWISE IN THE BILL OF REINFORCING STEEL.
2. ALL REINFORCING STEEL SHALL BE DEFORMED STEEL, UNLESS NOTED OTHERWISE IN THE BILL OF REINFORCING STEEL.
3. ALL BLACK REINFORCING STEEL SHALL CONFORM TO CSA G30.18–09 (R2014) "CARBON STEEL BARS FOR REINFORCEMENT" GRADE 400W.
4. LIKE BARS SHALL BE BUNDLED, SECURELY TIED AND IDENTIFIED AS TO MARK AND SITE NO. BY APPROPRIATE MEANS. ALL OTHER ITEMS TO BE IDENTIFIED IN A SIMILAR FASHION.
5. UNLESS OTHERWISE NOTED, PIN DIAMETERS SHALL BE SIMILAR AT ALL BENDS AND HOOKS OF A BAR IN ACCORDANCE WITH THE FOLLOWING DETAIL:

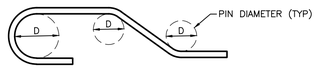

APEGM
Certificate of Authorization
Stantec Consulting Ltd.
No. 1301

METRIC
WHOLE NUMBERS INDICATE MILLIMETRES
DECIMALIZED NUMBERS INDICATE METRES

LOCATION APPROVED
UNDERGROUND STRUCTURES

SUPV. U/G STRUCTURES COMMITTEE — DATE

NOTE:
LOCATION OF UNDERGROUND STRUCTURES AS SHOWN ARE BASED ON THE BEST INFORMATION AVAILABLE BUT NO GUARANTEE IS GIVEN THAT ALL EXISTING UTILITIES ARE SHOWN OR THAT THE GIVEN LOCATIONS ARE EXACT. CONFIRMATION OF EXISTENCE AND EXACT LOCATION OF ALL SERVICES MUST BE OBTAINED FROM THE INDIVIDUAL UTILITIES BEFORE PROCEEDING WITH CONSTRUCTION.

B.M.
ELEV.

NO.	REVISIONS	DATE	BY
1	ISSUED FOR ADDENDUM 1	19.10.17	J.H.
0	ISSUED FOR TENDER	19.09.18	J.M.B.

Stantec
500 - 311 Portage Avenue, Winnipeg MB Canada
www.stantec.com

DESIGNED BY	H.M.V.	CHECKED BY	C.D.
DRAWN BY	J.M.B.	APPROVED BY	K.S.A.
HOR. SCALE: / VERTICAL:	1:75 OR AS NOTED	RELEASED FOR CONSTRUCTION:	
DATE	2019.10.18	DATE	

ENGINEER'S SEAL

TENDER DRAWING
NOT TO BE USED FOR CONSTRUCTION

CONSULTANT DRAWING NO.
S-107

Winnipeg
THE CITY OF WINNIPEG
PUBLIC WORKS DEPARTMENT
ENGINEERING DIVISION

DUBLIN AVENUE BRIDGE REPLACEMENT
PROPOSED BRIDGE STRUCTURE
SUBSTRUCTURE REINFORCING DETAILS 2 OF 2

SHEET 10 OF 48
CAD FILE DRAWING NUMBER 33340s-105-926.dwg
CITY DRAWING NUMBER B105-19-10

U:\132334\0\0300_drawings\0302_sheet files\03_structural\33340s-105-926.dwg
2019/10/18 11:12 AM By: Beiernaert, James