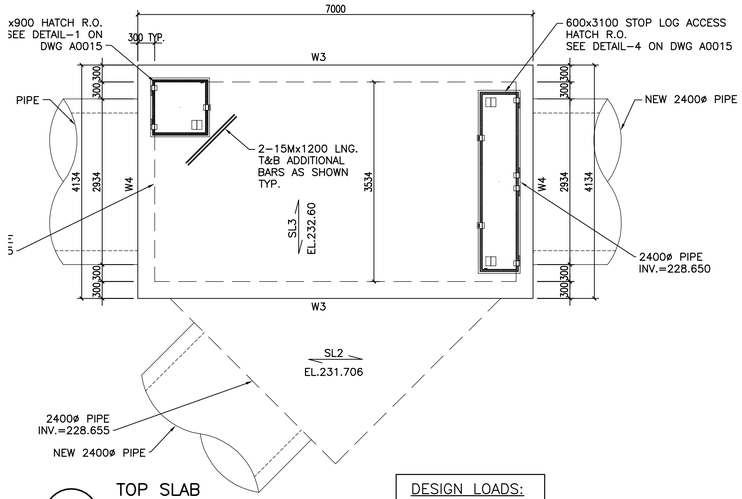

1 S0008 TOP SLAB CHAMBER #4 1:50

DESIGN LOADS:

LIVE = 4.8 kPa

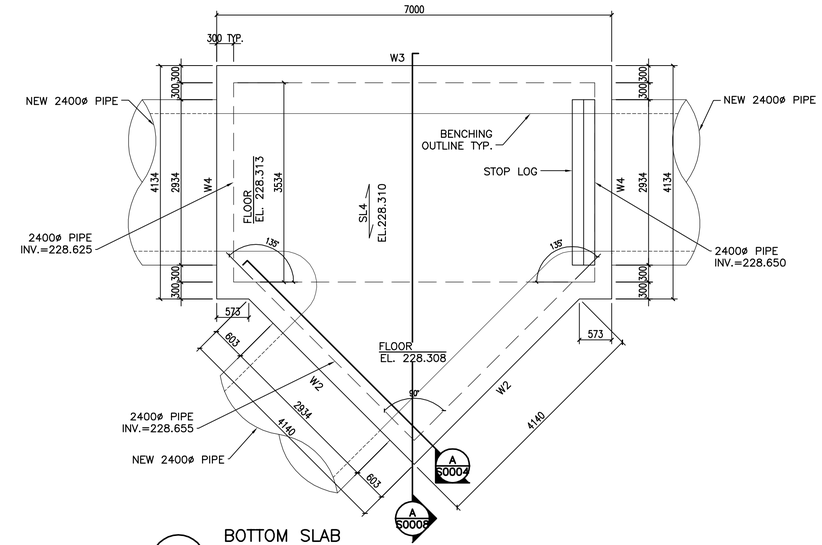

2 S0008 BOTTOM SLAB CHAMBER #4 1:50

DRAWING NOTES:
1. SEE CITY DRAWING NUMBER 1-0102U-S0003-001 FOR GENERAL NOTES.
2. SEE CITY DRAWING NUMBER 1-0102U-S0003-001 FOR WALL, SLAB AND BEAM SCHEDULE.
3. SEE CITY DRAWING NUMBER 1-0102U-S0004-001 FOR CONCRETE SECTIONS & TYPICAL DETAILS.

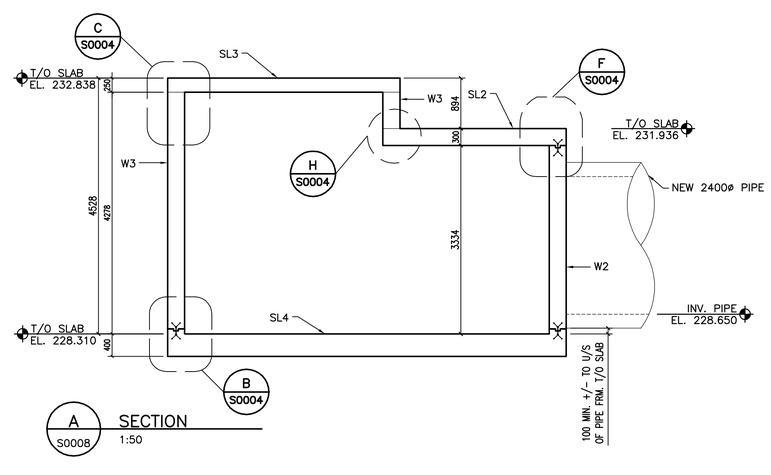

A S0008 SECTION 1:50

83R066 – N. side Frobisher Rd., 0.25km W. of St. Mary's Rd., Tblt. on top of 0.05m dia. x 1.2m iron pipe (near conc. gate chamber), 7.1m Nly. of N. side & 9.8m Wly. of W. side of conc. gate chamber 0.25km W. of St. Mary's Rd.

APEGM
Certificate of Authorization
Stantec Consulting Ltd.
No. 1301

RECORD DRAWING
BY G.L. / M.F. DATE 12.08.27
CHECKED BY B.F.

CONSTRUCTION COMPLETION DATE – APRIL 2011

LOCATION APPROVED
UNDERGROUND STRUCTURES

SUPV. U/G STRUCTURES COMMITTEE — DATE

NOTE:
LOCATION OF UNDERGROUND STRUCTURES AS SHOWN ARE BASED ON THE BEST INFORMATION AVAILABLE BUT NO GUARANTEE IS GIVEN THAT ALL EXISTING UTILITIES ARE SHOWN OR THAT THE GIVEN LOCATIONS ARE EXACT. CONFIRMATION OF EXISTENCE AND EXACT LOCATION OF ALL SERVICES MUST BE OBTAINED FROM THE INDIVIDUAL UTILITIES BEFORE PROCEEDING WITH CONSTRUCTION.

B.M. 81-007
ELEV. 230.438

NO.	REVISIONS	DATE	BY
02	DWG WAS 1-0102A-S0006-001	12.10.02	SW
1	RECORD DRAWING	12.02.03	G.L.
A	ISSUED FOR TENDER	09.10.13	H.A.K.

Stantec
Stantec Consulting Ltd.
905 Waverley Street, Winnipeg, Manitoba
Tel 204-489-5900 Fax 204-453-9012

DESIGNED BY	M.H.	CHECKED BY	T.D.
DRAWN BY	M.F.	APPROVED BY	C.M.
HOR. SCALE: VERTICAL:	AS NOTED	RELEASED FOR CONSTRUCTION:	
DATE	09.09.21	DATE	

ENGINEER'S SEAL
ORIGINAL SEALED BY B.E. FRASER P. ENG. 12/08/28

Winnipeg
THE CITY OF WINNIPEG
WATER AND WASTE DEPARTMENT

SOUTH END WATER POLLUTION CONTROL CENTRE
INSTALLATION OF OUTFALL PIPE
EFFLUENT SAMPLING FACILITY AND ASSOCIATED WORKS
CHAMBER NO.4
PLAN & SECTION

BID OPPORTUNITY NO. 709-2009
CITY DRAWING NUMBER 1-0102U-S0008-001
SHEET 1 OF 1

METRIC
WHOLE NUMBERS INDICATE MILLIMETRES
DECIMALIZED NUMBERS INDICATE METRES

U:\1112008SR_SAL_Drawing\record\Sheet Files\03_Structural\S0008_cmte_a1104.dwg
2013 September 06, 3:55 p.m.