A1 SIZE – 594mm x 841mm

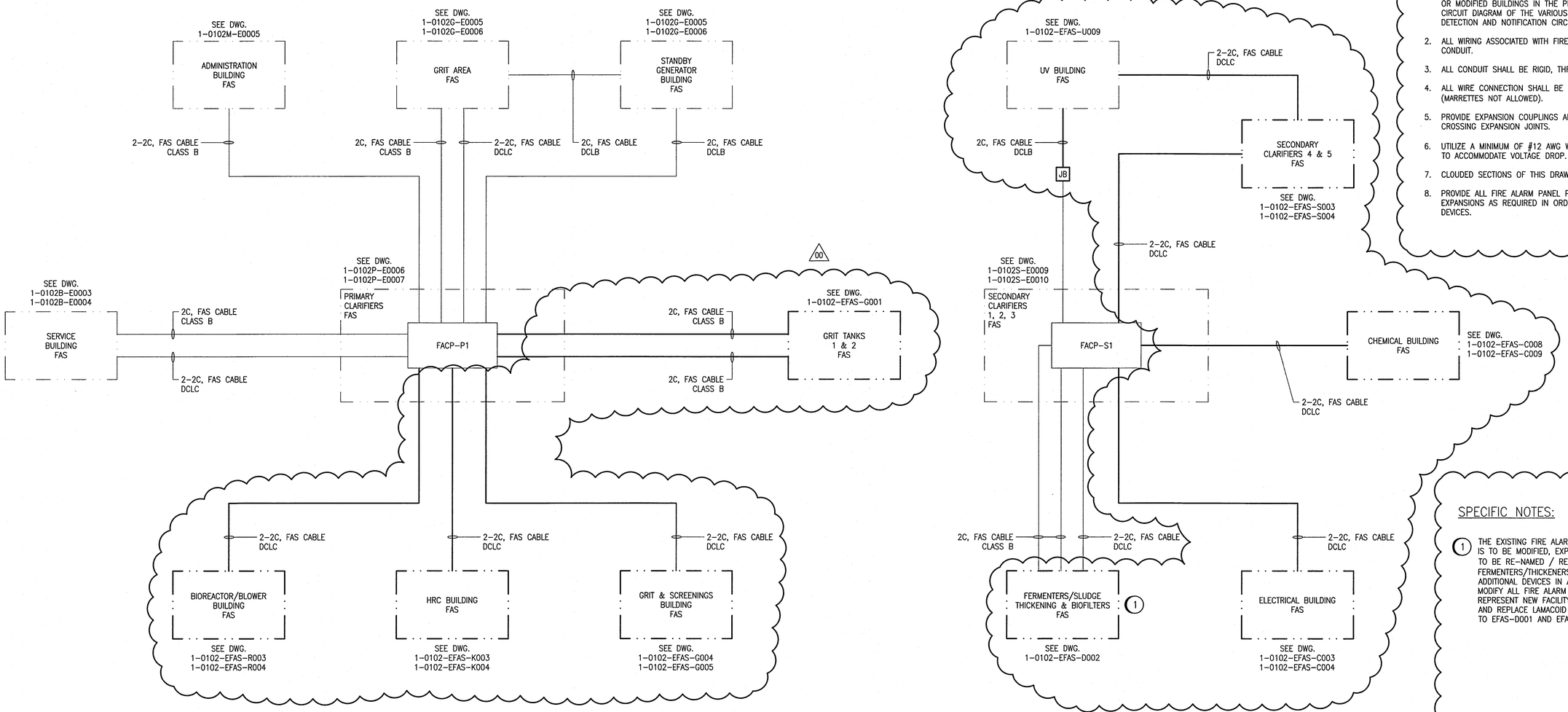

00

ABBREVIATION:

FAS	= FIRE ALARM SYSTEM
DCLB	= DATA COMMUNICATION LINK STYLE B, REFER TO CAN/ULC-S52
DCLC	= DATA COMMUNICATION LINK STYLE C, REFER TO CAN/ULC-S52
CLASS B	= TERMINATED CIRCUIT, REFER TO CAN/ULC-S52

GENERAL NOTES:

1. THIS DRAWING'S INTENT IS TO ILLUSTRATE THE FIRE ALARM FIELD WIRING CONNECTIONS FROM MAIN FIRE ALARM PANELS TO THE VARIOUS NEW OR MODIFIED BUILDINGS IN THE PLANT. FOR A DETAILED FIRE ALARM CIRCUIT DIAGRAM OF THE VARIOUS BUILDING, REFER TO ASSOCIATED DETECTION AND NOTIFICATION CIRCUIT DIAGRAMS INDICATED ON DRAWING.
2. ALL WIRING ASSOCIATED WITH FIRE ALARM EQUIPMENT SHALL BE RUN IN CONDUIT.
3. ALL CONDUIT SHALL BE RIGID, THREADED ALUMINUM CONDUIT.
4. ALL WIRE CONNECTION SHALL BE MADE VIA TERMINAL BLOCKS (MARRETTES NOT ALLOWED).
5. PROVIDE EXPANSION COUPLINGS AND FITTINGS FOR ALL CONDUIT CROSSING EXPANSION JOINTS.
6. UTILIZE A MINIMUM OF #12 AWG WIRE SIZE OR LARGER AS REQUIRED TO ACCOMMODATE VOLTAGE DROP.
7. CLOUDED SECTIONS OF THIS DRAWING INDICATE NEW WORK.
8. PROVIDE ALL FIRE ALARM PANEL PROGRAMMING, CARD AND MODULE EXPANSIONS AS REQUIRED IN ORDER TO ACCOMMODATE NEW FIRE ALARM DEVICES.

00

SPECIFIC NOTES:

1. THE EXISTING FIRE ALARM SYSTEM FOR THE OXYGEN REACTORS IS TO BE MODIFIED, EXPANDED AND RE-USED. THE AREA IS TO BE RE-NAMED / RE-TAGGED AS THE FERMENTERS/THICKENERS AND BIOFILTER AREAS. ADD ADDITIONAL DEVICES IN ACCORDANCE WITH THE DRAWINGS. MODIFY ALL FIRE ALARM DEVICE IDENTIFIERS IN AREA TO REPRESENT NEW FACILITY CODE AND ROOM NUMBERS. REMOVE AND REPLACE LAMACOID NAMEPLATES FOR ALL DEVICES. REFER TO EFAS-D001 AND EFAS-D002.

REFERENCE DRAWINGS	DESCRIPTION
--	--

APEGM Certificate of Authorization
SNC-Lavalin Inc.
No. 4489

NO.	REVISIONS	DATE	DESIGN	CHECK
00	ISSUED FOR CONSTRUCTION – 976-2016	2017/04/05	WE	DEB

CH2MHILL. SNC·LAVALIN KGS GROUP

DESIGNED BY: V. ELIMBAN	CHECKED BY: E. RYCZKOWSKI
DRAWN BY: MJ. PERSSON	APPROVED BY: D. BECKER
SCALE: NTS	ISSUED FOR CONSTRUCTION BY: J. SHUMKA
DATE: 2016/05/27	DATE: 2017/04/05
CONSULTANT NO.: 474248	

ENGINEER'S SEAL
PROVINCE OF MANITOBA
D.E. BECKER
Member
23646
REGISTERED PROFESSIONAL ENGINEER
Apr. 15/2017

Winnipeg
THE CITY OF WINNIPEG
WATER AND WASTE DEPARTMENT

SOUTH END WATER POLLUTION CONTROL CENTRE
SEWPCC UPGRADING/EXPANSION PROJECT
ELECTRICAL
FIRE ALARM
RISER DIAGRAM

CITY DRAWING NUMBER	SHEET	REV.	SIZE
1-0102-EFAS-A002	001	00	A1

PLOT DATE: Mar 31, 2017 – 4:33pm
FILE NAME: 1-0102-EFAS-A002.dwg

LAST SAVE: 2017/03/31 – 4:33pm
PATH: C:\pw_workdir\ch2mhill_wbg\ve006717\d0355952\1-0102-EFAS-A002.dwg