B SIZE - 279mm x 432mm

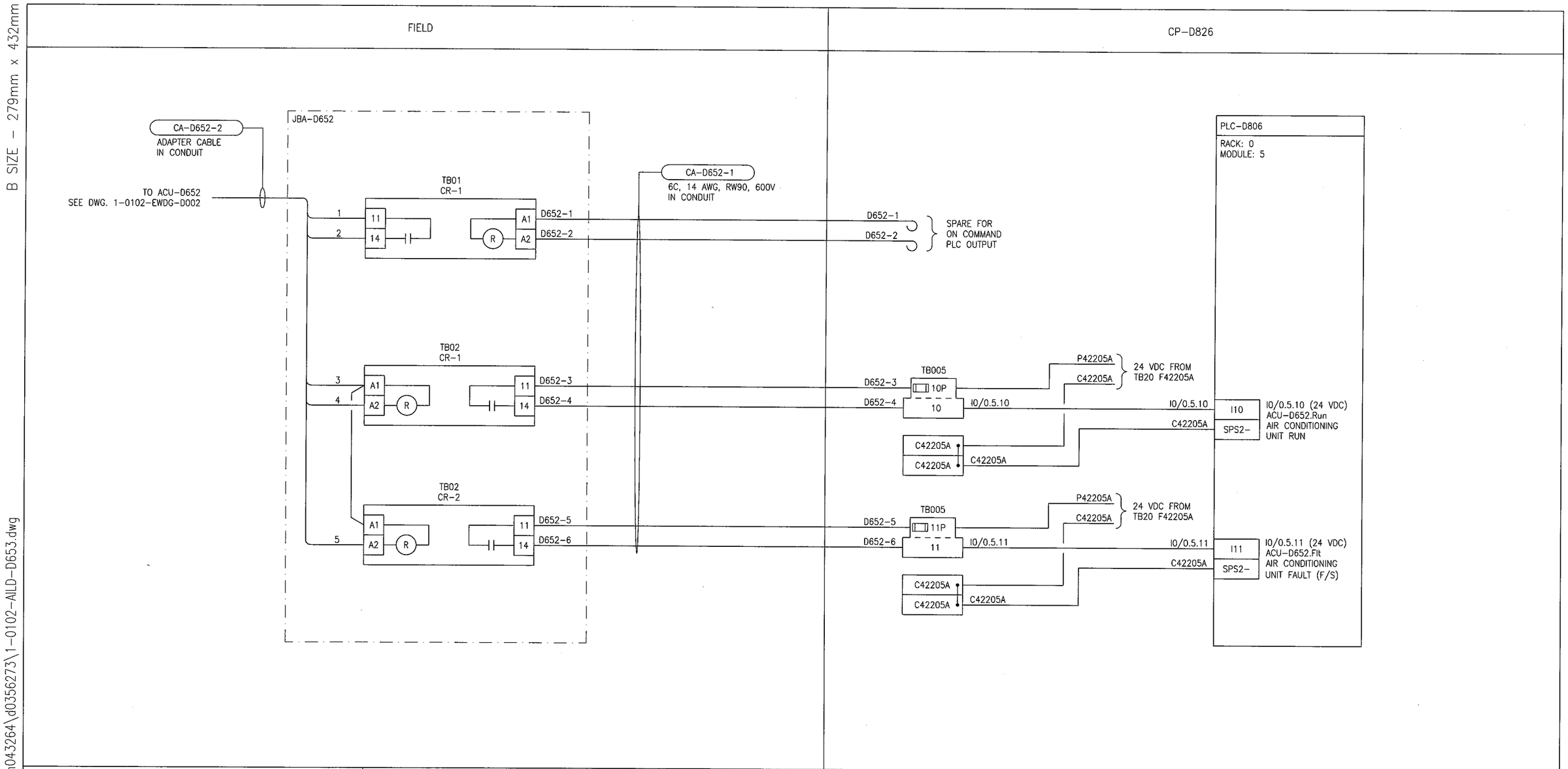

SNC·LAVALIN CH2MHILL KGS GROUP CONSULTING ENGINEERS

NO.	REVISIONS	DATE	DESIGN	CHECK
00	ISSUED FOR CONSTRUCTION - 976-2016	2017/04/05	SSB	TMC

DESIGNED BY: S. BOGHOSIAN	CHECKED BY: T. CHURCH
DRAWN BY: J. GRAGASIN	APPROVED BY: E. RYCZKOWSKI
SCALE: NTS	DATE: 2016/12/14
ISSUED FOR CONSTRUCTION BY: J. SHUMKA	DATE: 2017/04/05
CONSULTANT NO.: 474248	

ENGINEER'S SEAL

PROVINCE OF MANITOBA
T. M. CHURCH
Member
32682
REGISTERED PROFESSIONAL ENGINEER
Apr. 4, 2017

APEGM Certificate of Authorization
SNC-Lavalin Inc.
No. 4489

Winnipeg

THE CITY OF WINNIPEG
WATER AND WASTE DEPARTMENT

SOUTH END WATER POLLUTION CONTROL CENTRE
SEWPCC UPGRADING/EXPANSION PROJECT
AUTOMATION - LOOP DIAGRAM
ACU-D652
ELECTRICAL ROOM B AIR CONDITIONING UNIT

CITY DRAWING NUMBER	SHEET	REV.	SIZE
1-0102-AILD-D653	001	00	B

LAST SAVE: 2017/04/01 - 9:58am
PATH: C:\pw_workdir\ch2mhill_wbg\sh043264\d0356273\1-0102-AILD-D653.dwg

PLOT DATE: Apr 01, 2017 - 9:58am

FILE NAME: 1-0102-AILD-D653.dwg