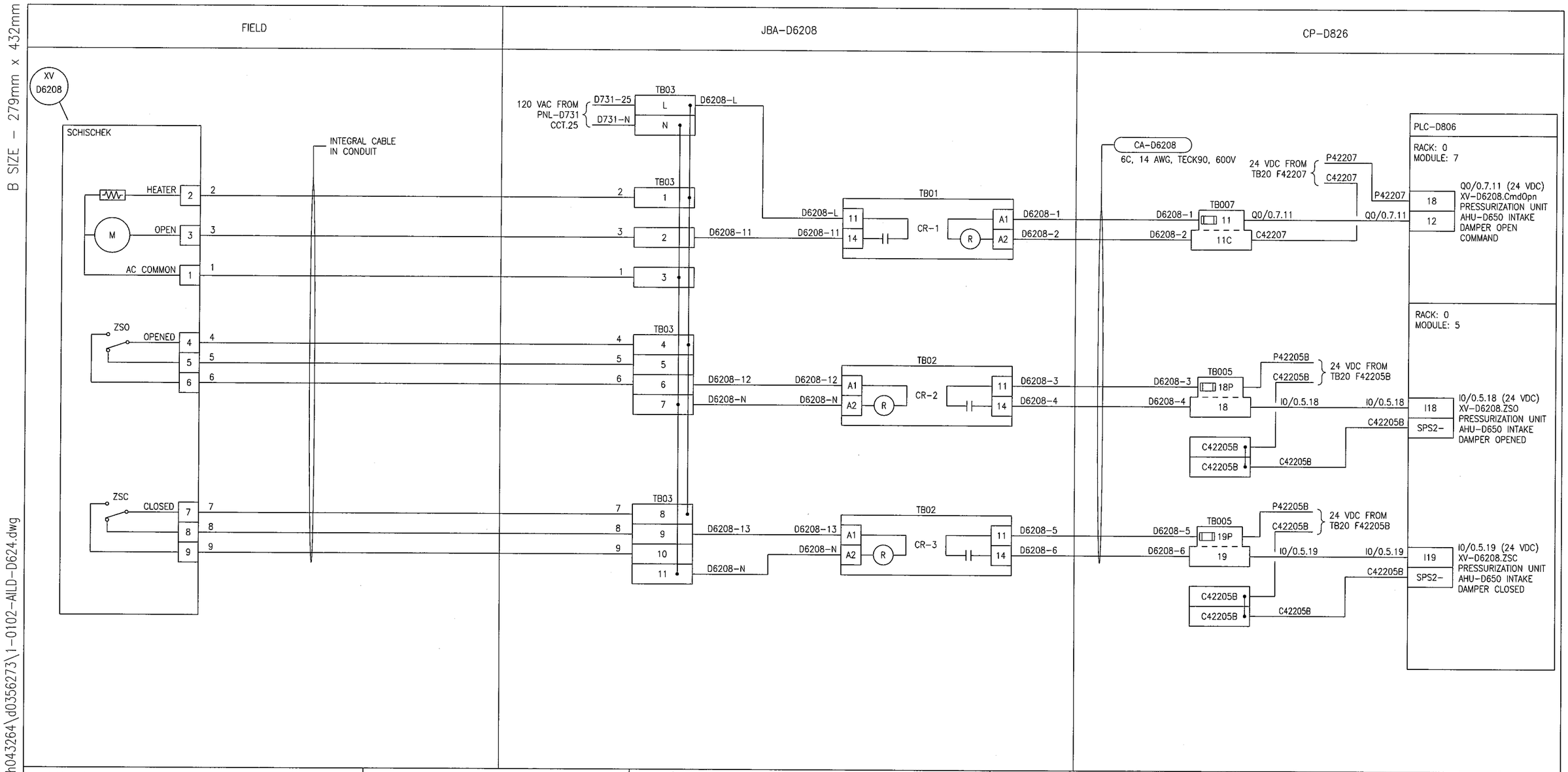

NOTES

1.

APEGM Certificate of Authorization
SNC-Lavalin Inc.
No. 4489

NO.	REVISIONS	DATE	DESIGN	CHECK
00	ISSUED FOR CONSTRUCTION - 976-2016	2017/04/05	SSB	TMC

SNC·LAVALIN CH2MHILL KGS GROUP CONSULTING ENGINEERS

DESIGNED BY: S. BOGHOSIAN	CHECKED BY: T. CHURCH
DRAWN BY: G. WILLIAMSON	APPROVED BY: E. RYCZKOWSKI
SCALE: NTS	DATE: 2016/12/09
ISSUED FOR CONSTRUCTION BY: J. SHUMKA	DATE: 2017/04/05
CONSULTANT NO.: 474248	

ENGINEER'S SEAL
PROVINCE OF MANITOBA
T. M. Church
CHURCH
Member
32682
REGISTERED PROFESSIONAL ENGINEER
Apr. 4, 2017

Winnipeg
THE CITY OF WINNIPEG
WATER AND WASTE DEPARTMENT

SOUTH END WATER POLLUTION CONTROL CENTRE
SEWPCC UPGRADING/EXPANSION PROJECT
AUTOMATION - LOOP DIAGRAM
XV-D6208
PRESSURIZATION UNIT AHU-D650 INTAKE DAMPER

CITY DRAWING NUMBER	SHEET	REV.	SIZE
1-0102-AILD-D624	001	00	B

B SIZE - 279mm x 432mm

LAST SAVE: 2017/04/01 - 9:57am
PATH: C:\pw_workdir\ch2mhill_wbg\sh043264\d0356273\1-0102-AILD-D624.dwg

PLOT DATE: Apr 01, 2017 - 9:57am
FILE NAME: 1-0102-AILD-D624.dwg