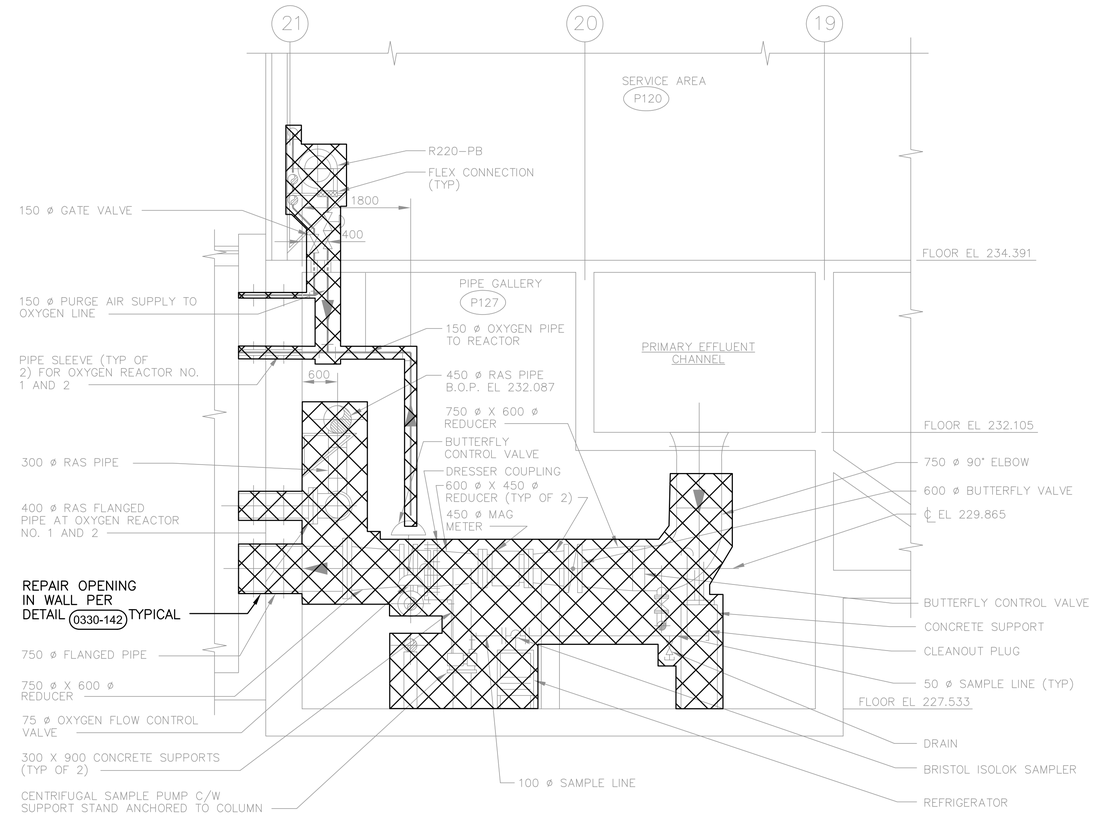

2 SECTION
M103 M104 1:50

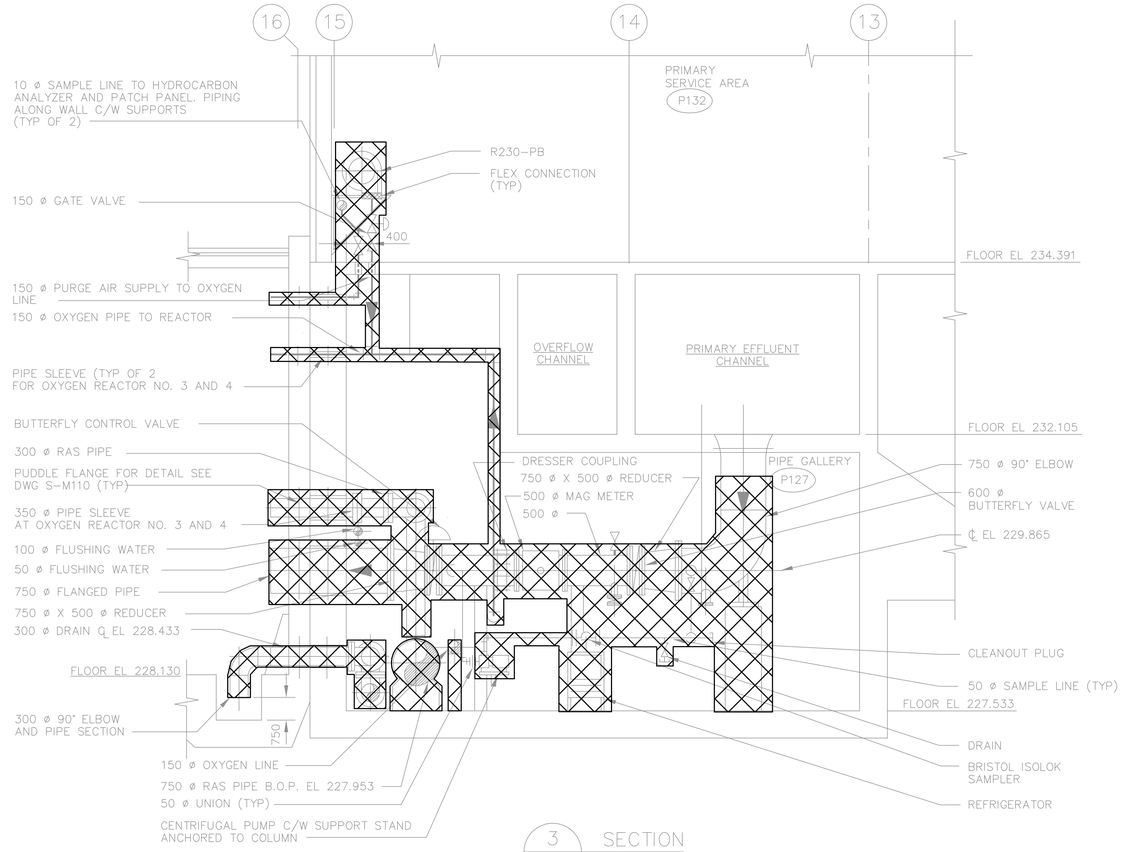

3 SECTION
M103 M104 1:50

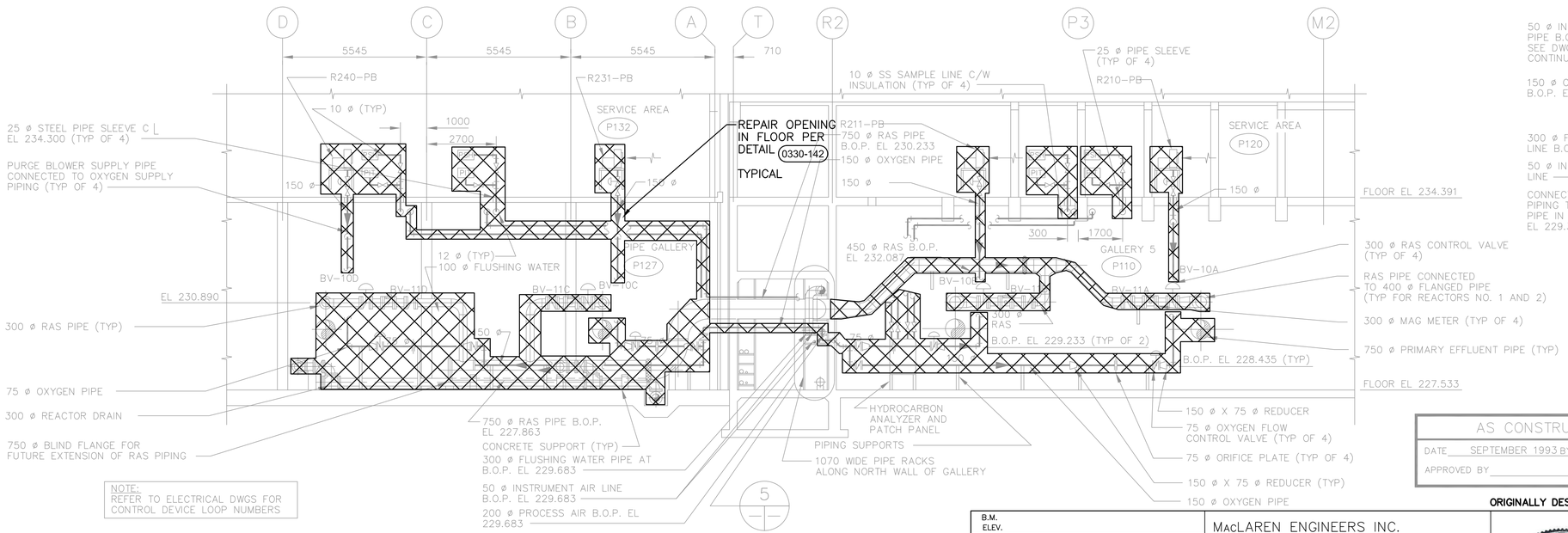

NOTE:
REFER TO ELECTRICAL DWGS FOR CONTROL DEVICE LOOP NUMBERS

5

4 SECTION
M103 M104 1:100

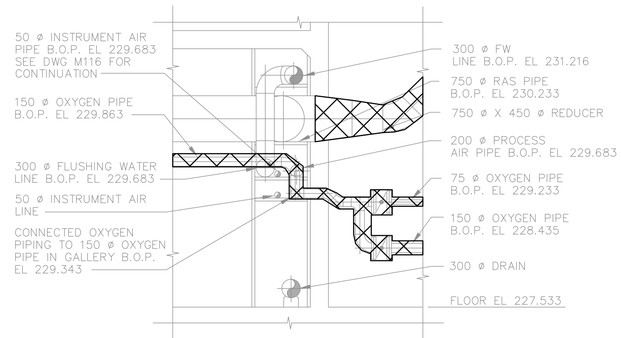

DETAIL
1:50

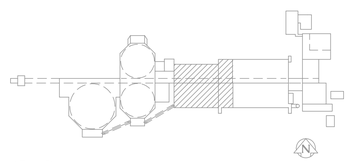

KEY PLAN
N.T.S.

AS CONSTRUCTED
DATE SEPTEMBER 1993 BY P.R.B.
APPROVED BY

NOTES:

1. FOR NEW CONSTRUCTION SEE PROCESS/MECHANICAL PRIMARY SLUDGE FERMENTERS/THICKENERS DRAWINGS.
2. REFER TO GENERAL DEMOLITION NOTES DRAWING 1–0102–DAAA–AD01.

NO.	REVISIONS	DATE	BY
00	ISSUED FOR CONSTRUCTION – 976–2016	04/05/2017	B.C.

B.M. ELEV.

MacLAREN ENGINEERS INC.
WARDROP ENGINEERING INC.
ENGINEERING CONSULTANTS

DESIGNED BY L.O.C. | CHECKED BY L.O.C.
DRAWN BY E.G. /CAD | APPROVED BY
HOR. SCALE: AS NOTED | RELEASED FOR CONSTRUCTION:
VERTICAL:
DATE FEBRUARY, 1990 | DATE

ORIGINALLY DESIGNED BY

PROVINCE OF MANITOBA
F. J. ABSI
Member 36875
REGISTERED PROFESSIONAL ENGINEER
Apr 5/94

CONSULTANT DRAWING NO.
10009–R–M104

THE CITY OF WINNIPEG
WORKS AND OPERATIONS DIVISION
WATERWORKS, WASTE & DISPOSAL DEPARTMENT

SOUTH END WATER POLLUTION CONTROL CENTRE
OXYGEN REACTOR EXPANSION – MECHANICAL

OXYGEN REACTOR NO. 1, 2, 3 & 4
SECTIONS

CITY DRAWING NUMBER
SHEET OF
SEP–349