A1 SIZE – 594mm x 841mm

ELECTRONIC CIRCUIT PROTECTION SCHEDULE			
TB	IDENTIFIER	SIZE	RATING
TB20	CB–0921	12.5x80mm	2A CLASS 2
	CB–0922	12.5x80mm	3A CLASS 2
	CB–0923	12.5x80mm	1A CLASS 2
TB21	CB–2921	12.5x80mm	2A CLASS 2
	CB–2922	12.5x80mm	3A CLASS 2
	CB–2923	12.5x80mm	1A CLASS 2
TB22	CB–4721	12.5x80mm	2A CLASS 2
	CB–4722	12.5x80mm	2A CLASS 2
NOTES			

ADP–D832 POWER CONSUMPTION SCHEDULE AT 24 VDC				
LOAD	RM01 CURRENT (mA)	RM02 CURRENT (mA)	RM03 CURRENT (mA)	NOTES
ND–D840–3 RACK	1100	–	800	2
ND–D840–3 SEGMENT D852	114	–		1
ND–D841–3 RACK	–	1100	800	2
ND–D841–3 SEGMENT D862	–	86		1
TOTAL	1214	1186	1600	

NOTES
1. BASED ON DATA SHEET.
2. ESTIMATED.

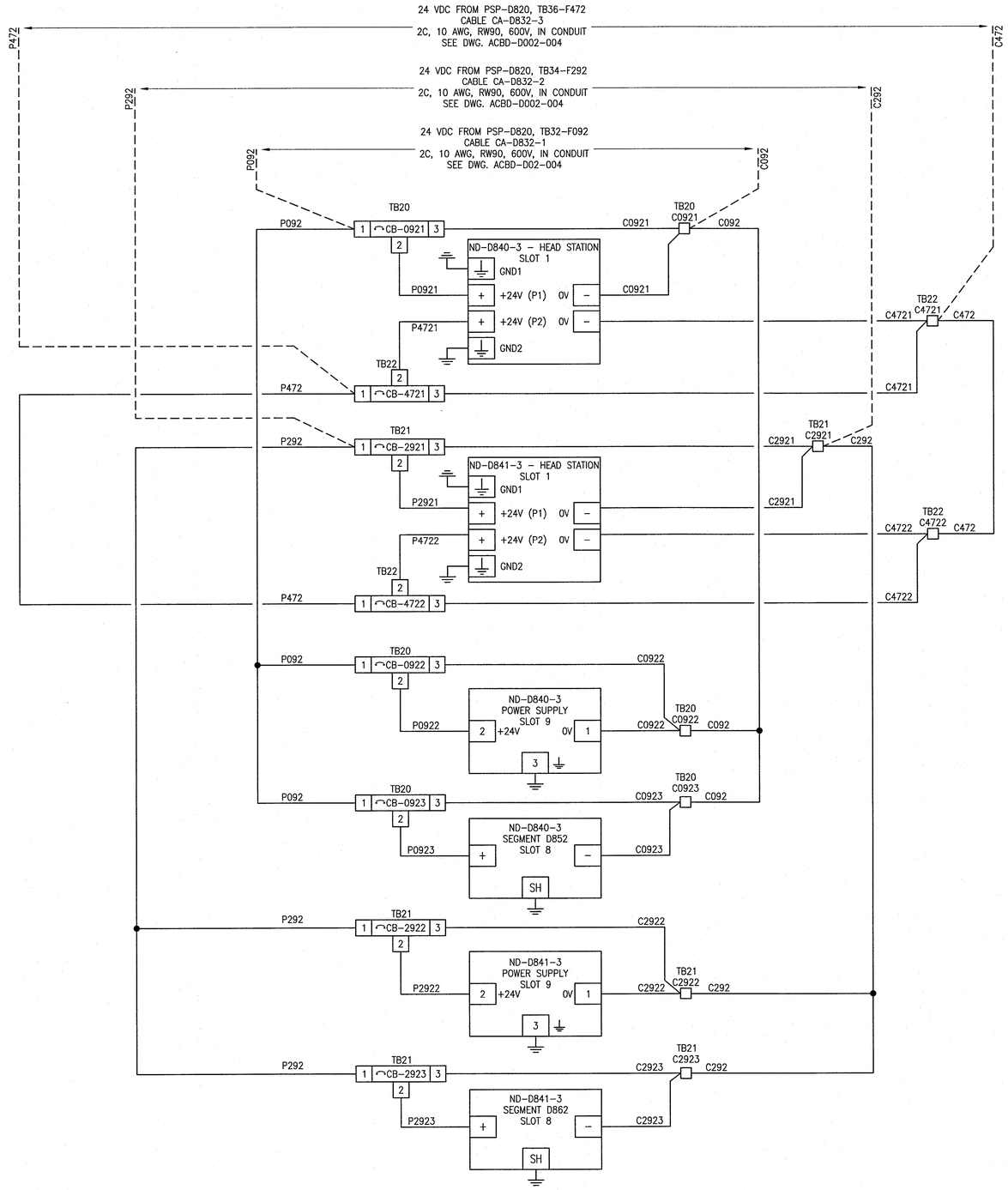

TERMINAL LAYOUT TB20
CB–0921
CB–0922
CB–0923
C0921
C0922
C0923

TERMINAL LAYOUT TB21
CB–2921
CB–2922
CB–2923
C2921
C2922
C2923

TERMINAL LAYOUT TB22
CB–4721
CB–4722
C4721
C4722

LEGEND:

⏚ EQUIPMENT GROUND

REFERENCE DRAWINGS	DESCRIPTION
–	–

APEGM Certificate of Authorization
SNC-Lavalin Inc.
No. 4489

NO.	REVISIONS	DATE	DESIGN	CHECK
00	ISSUED FOR CONSTRUCTION – 976–2016	2017/04/05	MW	PC

CH2MHILL. KGS GROUP SNC·LAVALIN

DESIGNED BY: M. WANG	CHECKED BY: P. CHICATUN
DRAWN BY: B. DE GUZMAN	APPROVED BY: E. RYCZKOWSKI
SCALE: NTS	ISSUED FOR CONSTRUCTION BY: J. SHUMKA
DATE: 2016/08/22	DATE: 2017/04/05
CONSULTANT NO.: 474248	

ENGINEER'S SEAL
PROVINCE OF MANITOBA
CHICATUN
Member
30307
REGISTERED PROFESSIONAL ENGINEER
APR. 4, 2017

Winnipeg
THE CITY OF WINNIPEG
WATER AND WASTE DEPARTMENT

SOUTH END WATER POLLUTION CONTROL CENTRE
SEWPCC UPGRADING/EXPANSION PROJECT
AUTOMATION – POWER DISTRIBUTION SCHEMATIC
FERMENTERS/THICKENERS/BIOFILTERS
ADP–D832 PROFIBUS EQUIPMENT CABINET

CITY DRAWING NUMBER	SHEET	REV.	SIZE
1–0102–ACBD–D064	001	00	A1

PLOT DATE: Apr 01, 2017 – 10:14am
FILE NAME: 1–0102–ACBD–D064.dwg

LAST SAVE: 2017/04/01 – 10:14am
PATH: C:\pw_workdir\ch2mhill_wbg\sh04326A\d0356273\1–0102–ACBD–D064.dwg