A1 SIZE – 594mm x 841mm

LEGEND:

——— COPPER COMMUNICATION CONNECTION

– – – FIBRE COMMUNICATION CONNECTION

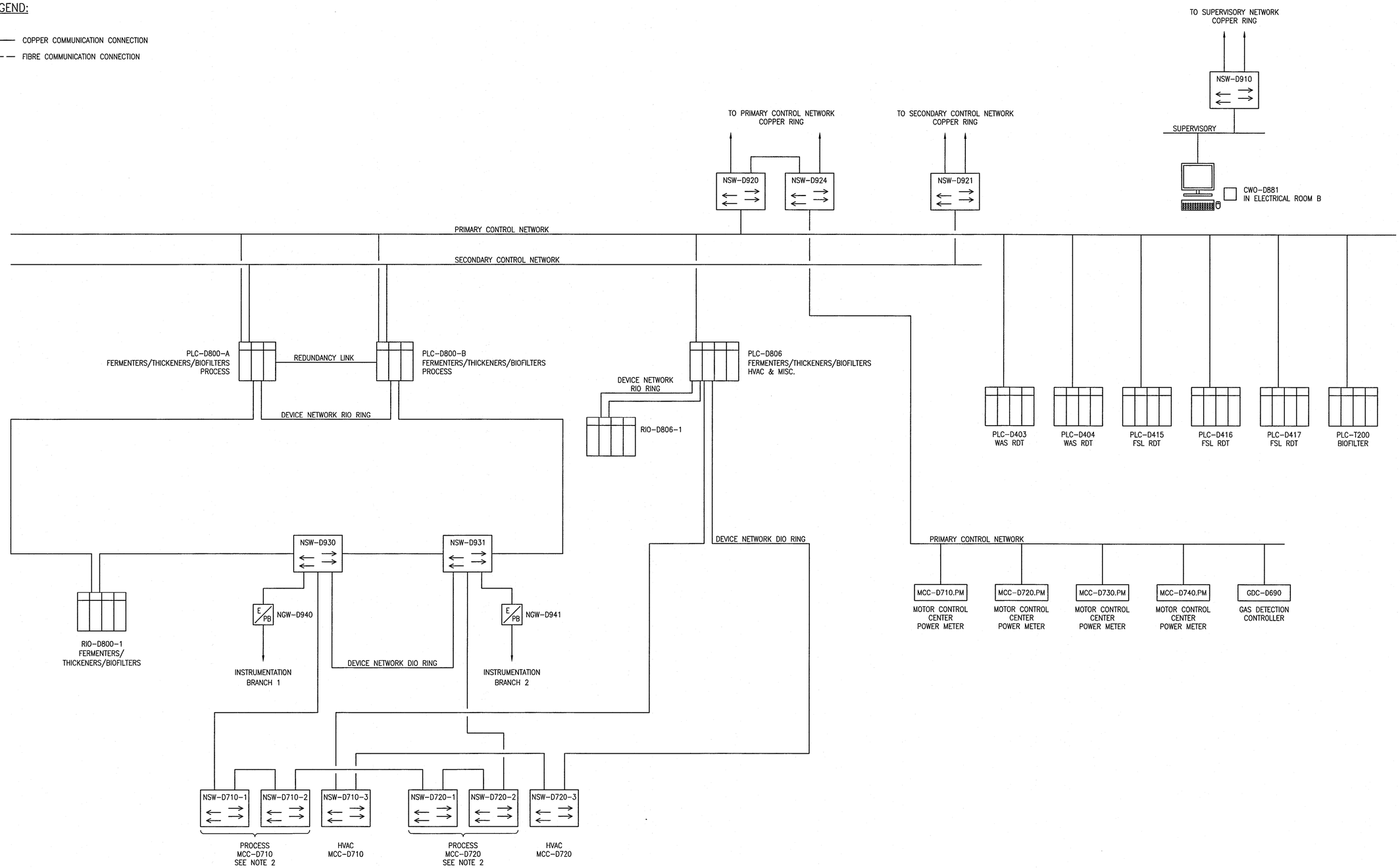

NOTES:

1. ONLY HIGH LEVEL ARCHITECTURE IS DEPICTED, CONNECTIONS MAY NOT BE EXACTLY AS SHOWN. SEE NETWORK DIAGRAM FOR ADDITIONAL DETAILS.
2. MCC-D730 AND MCC-D740 DEVICES ARE CONNECTED TO MCC-D710 AND MCC-D720 SWITCHES.

REFERENCE DRAWINGS	DESCRIPTION
1-0102-ANET-A001	SUPERVISORY, CONTROL AND SERVER NETWORK OVERVIEW
1-0102-ANET-A005	FACILITY FIBRE ALLOCATION

APEGM Certificate of Authorization
SNC-Lavalin Inc.
No. 4489

NO.	REVISIONS	DATE	DESIGN	CHECK
00	ISSUED FOR CONSTRUCTION – 976-2016	2017/04/05	PC	TMC

CH2MHILL. SNC·LAVALIN KGS GROUP

DESIGNED BY: P. CHICATUN	CHECKED BY: T. CHURCH
DRAWN BY: J. GRAGASIN	APPROVED BY: KSB Company
SCALE: NTS	ISSUED FOR CONSTRUCTION BY: J. SHUMKA
DATE: 2016/06/28	DATE: 2017/05/05
CONSULTANT NO.: 474248	

ENGINEER'S SEAL
PROVINCE OF MANITOBA
CHICATUN Member 30307
REGISTERED PROFESSIONAL ENGINEER
APR 4 2017

Winnipeg
THE CITY OF WINNIPEG
WATER AND WASTE DEPARTMENT

SOUTH END WATER POLLUTION CONTROL CENTRE
SEWPCC UPGRADING/EXPANSION PROJECT
AUTOMATION
FERMENTERS/THICKENERS/BIOFILTERS
CONTROL SYSTEM ARCHITECTURE

CITY DRAWING NUMBER	SHEET	REV.	SIZE
1-0102-ABDG-D001	001	00	A1

LAST SAVE: 2017/04/01 – 10:09am
PATH: C:\pw_workdir\ch2mhill_wbg\sh043264\d0356273\1-0102-ABDG-D001.dwg

PLOT DATE: Apr 01, 2017 – 10:09am

FILE NAME:1-0102-ABDG-D001.dwg