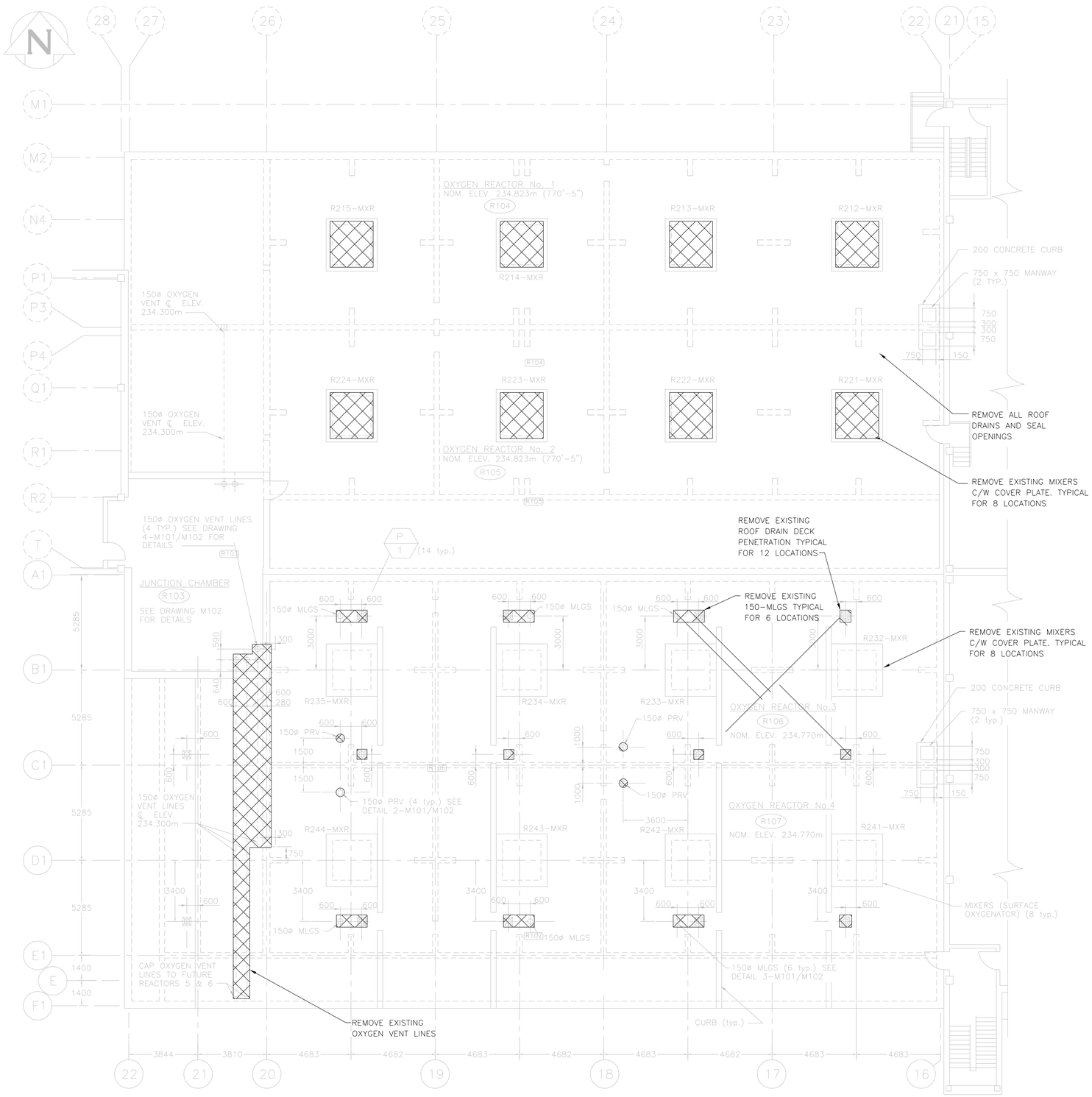


1 REACTOR DECK PLAN ELEV. 234.770m
1:125

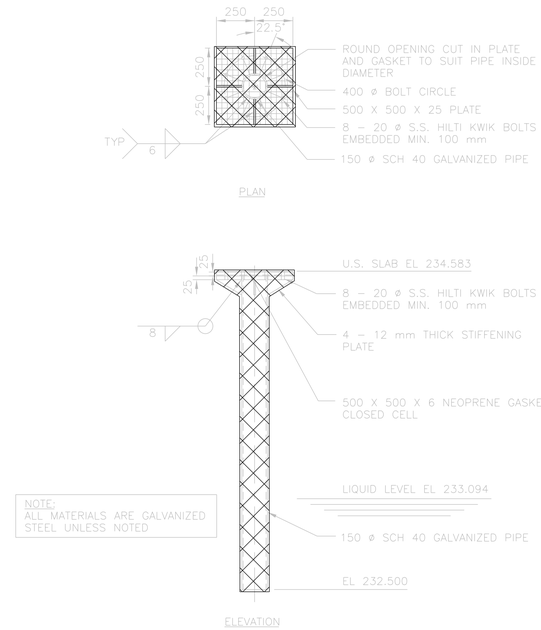


2 ROOF DRAIN DECK PENETRATION
1:20

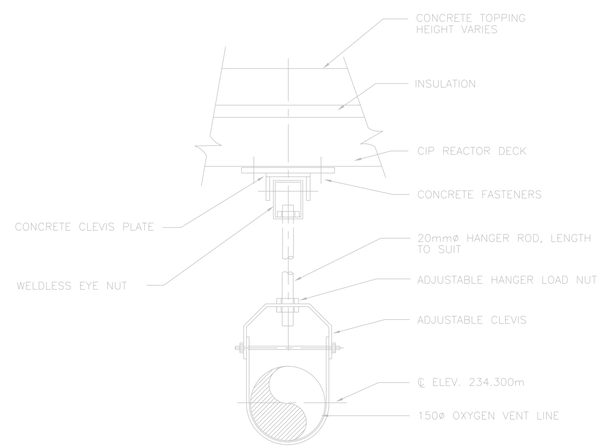


3 OXYGEN VENT LINE HANGER DETAIL
N.T.S.

AS CONSTRUCTED
DATE SEPTEMBER 1993 BY P.R.B.
APPROVED BY



KEY PLAN
N.T.S.

NOTES:

1. FOR NEW CONSTRUCTION SEE PROCESS/MECHANICAL PRIMARY SLUDGE FERMENTERS/THICKENERS DRAWINGS.
2. REFER TO GENERAL DEMOLITION NOTES DRAWING 1-0102-DAAA-AD01.

| NO. | REVISIONS | DATE | BY |
|---|---|---|---|
| 00 | ISSUED FOR CONSTRUCTION - 976-2016 | 04/05/2017 | KF |

B.M. ELEV.

MacLAREN ENGINEERS INC.
WARDROP ENGINEERING INC.
ENGINEERING CONSULTANTS

| | | | |
|---|---|---|---|
| DESIGNED BY | S.Q. | CHECKED BY | |
| DRAWN BY | V.J.H. | APPROVED BY | |
| HOR. SCALE: VERTICAL: | AS SHOWN | RELEASED FOR CONSTRUCTION: | |
| DATE | JANUARY 1990 | DATE | |

ORIGINALLY DESIGNED BY

PROVINCE OF MANITOBA
April 5, 2017
F. J. ABSI
Member 36875
REGISTERED PROFESSIONAL ENGINEER

CONSULTANT DRAWING NO.
870012-01-19-R-M101

THE CITY OF WINNIPEG
WORKS AND OPERATIONS DIVISION
WATERWORKS, WASTE & DISPOSAL DEPARTMENT

SOUTH END WATER POLLUTION CONTROL CENTRE

CITY DRAWING NUMBER

SHEET OF

OXYGEN REACTOR TANKS
REACTOR DECK PLAN AND PIPE PENETRATION DETAILS

SEP-346