A1 SIZE - 594mm x 841mm

ELEMENTARY DIAGRAM:

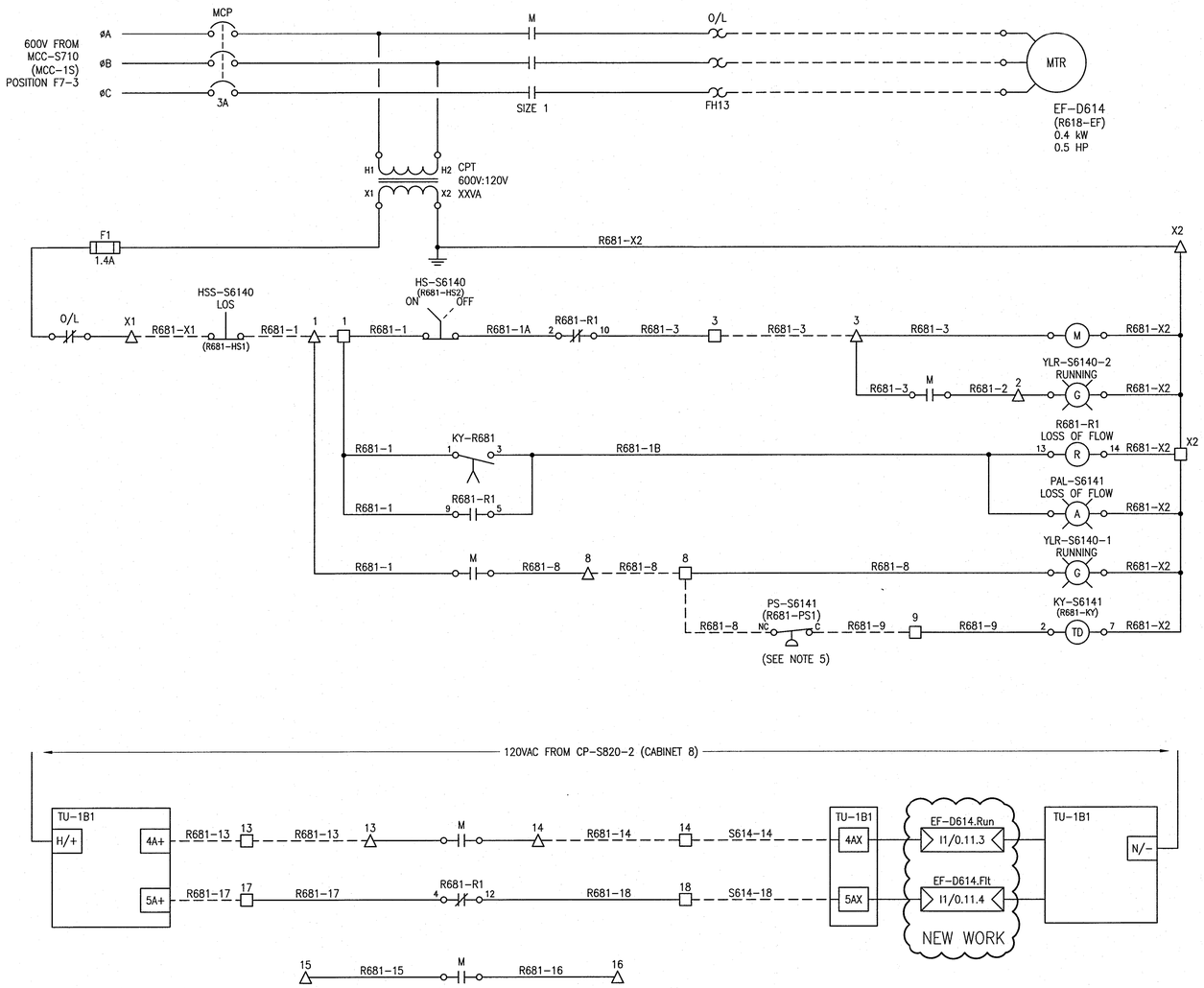

FIELD CONNECTION DIAGRAM:

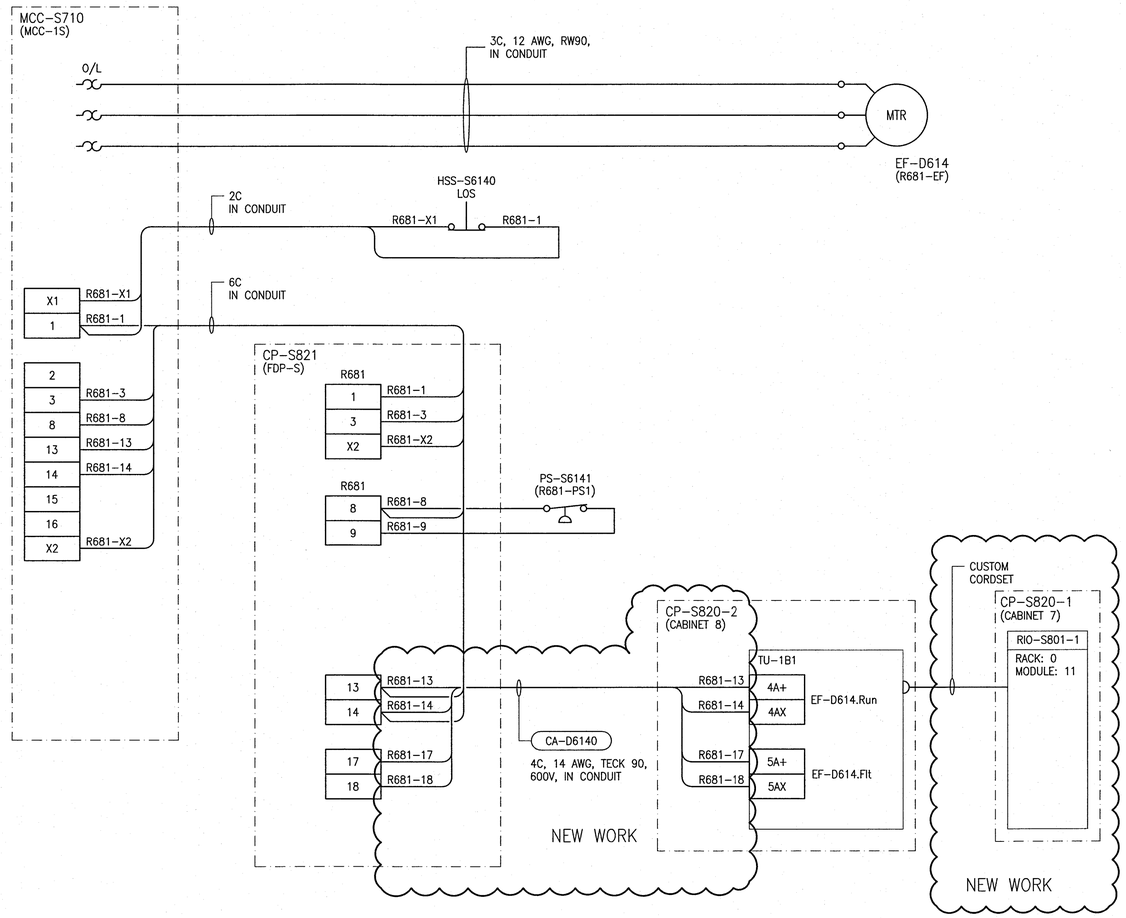

NEW WORK
REPLACE PILOT LIGHTS AS REQUIRED, WITH COLOURS AS SHOWN

LEGEND:

- △ MCC TERMINAL
- □ CP-S821 CABINET TERMINAL ▷ ◁ RIO-S801-1 INPUT

REFERENCE DRAWINGS	DESCRIPTION

NOTES

1. THIS DRAWING SUPERCEDES SEP-688.
2. THIS DRAWING WAS BASED UPON EXISTING DOCUMENTATION AND MAY NOT REPRESENT THE ACTUAL INSTALLATION.
3. PREVIOUS IDENTIFIERS ARE SHOWN IN PARENTHESES.
4. THE ENGINEER'S DESIGN RESPONSIBILITY IS LIMITED TO THE REPLACEMENT OF THE DCS WITH PLC-BASED CONTROL.
5. PRESSURE SWITCH SHOWN IN SHELF STATE.
6. EQUIPMENT NUMBER WAS CHANGED FROM R681 TO D614 IN ORDER TO COMPLY WITH IDENTIFICATION STANDARD. HOWEVER EXISTING WIRING AND RELAYS ARE STILL LABELED WITH OLD EQUIPMENT NUMBER.

APEGM Certificate of Authorization
SNC-Lavalin Inc.
No. 4489

NO.	REVISIONS	DATE	DESIGN	CHECK
00	ISSUED FOR CONSTRUCTION - 976-2016	2017/04/05	SSB	TMC

CH2MHILL. SNC·LAVALIN KGS GROUP

DESIGNED BY: S. BOGHOSIAN	CHECKED BY: T. CHURCH
DRAWN BY: S. BOGHOSIAN	APPROVED BY: E. RYCZKOWSKI
SCALE: NTS	ISSUED FOR CONSTRUCTION BY: J. SHUMKA
DATE:	DATE: 2017/04/05
CONSULTANT NO.: 474248	

ENGINEER'S SEAL
PROVINCE OF MANITOBA
T.M. CHURCH
Member 32682
REGISTERED PROFESSIONAL ENGINEER
Apr. 4, 2017

Winnipeg
THE CITY OF WINNIPEG
WATER AND WASTE DEPARTMENT

SOUTH END WATER POLLUTION CONTROL CENTRE
SEWPCC UPGRADING/EXPANSION PROJECT
ELECTRICAL - MOTOR STARTER SCHEMATIC
EF-D614
JUNCTION CHAMBER R103 EXHAUST FAN

CITY DRAWING NUMBER	SHEET	REV.	SIZE
1-0102-EMCL-D614	001	00	A1

PLOT DATE: Mar 30, 2017 - 3:30am
FILE NAME: 1-0102-EMCL-D614.dwg

LAST SAVE: 2017/03/30 - 3:30am
PATH: M:\614099\4ENG\47ELE\DD - General DWG\REV\2017-04-05 Issued for Construction - 976-2016\D Fermenters-thickeners\DWG\1-0102-EMCL-D614.dwg