B SIZE - 279mm x 432mm

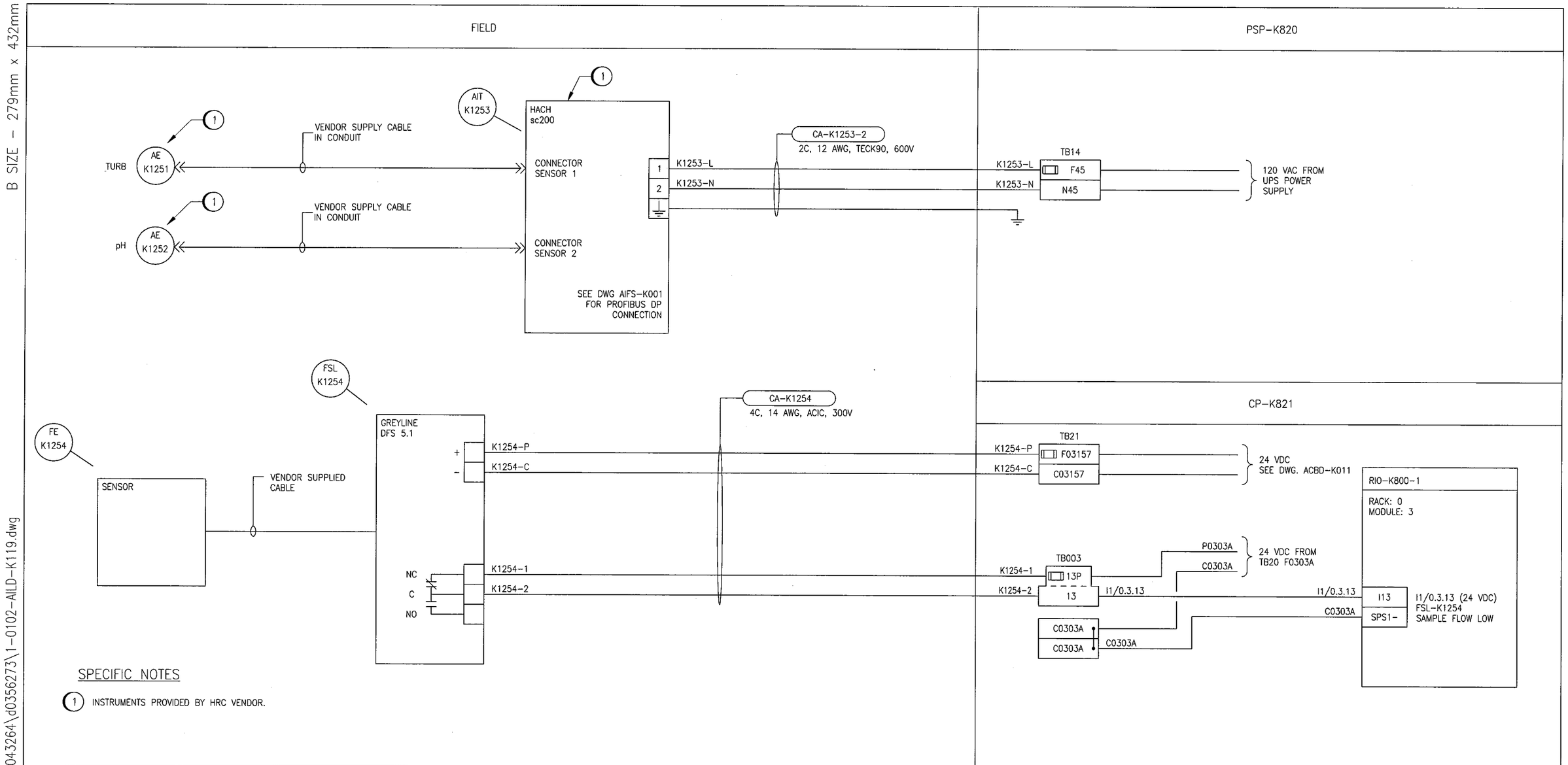

SPECIFIC NOTES

1. INSTRUMENTS PROVIDED BY HRC VENDOR.

NOTES

APEGM Certificate of Authorization
SNC-Lavalin Inc.
No. 4489

NO.	REVISIONS	DATE	DESIGN	CHECK
00	ISSUED FOR CONSTRUCTION - 976-2016	2017/04/05	SSB	TMC

SNC·LAVALIN CH2MHILL KGS GROUP CONSULTING ENGINEERS

DESIGNED BY: S. BOGHOSIAN	CHECKED BY: T. CHURCH
DRAWN BY: MJ. PERSSON	APPROVED BY: E. RYCZKOWSKI
SCALE: NTS	DATE: 2016/09/02
ISSUED FOR CONSTRUCTION BY: J. SHUMKA	DATE: 2017/04/05
CONSULTANT NO.: 474248	

ENGINEER'S SEAL
PROVINCE OF MANITOBA
TOM CHURCH
Member 32682
REGISTERED PROFESSIONAL ENGINEER
Apr. 5, 2017

Winnipeg
THE CITY OF WINNIPEG
WATER AND WASTE DEPARTMENT

SOUTH END WATER POLLUTION CONTROL CENTRE
SEWPCC UPGRADING/EXPANSION PROJECT
AUTOMATION - LOOP DIAGRAM
AIT-K1253 AND FSL-K1254
EFFLUENT CHANNEL 2 PH & TURBIDITY AND SAMPLE FLOW SWITCH

CITY DRAWING NUMBER	SHEET	REV.	SIZE
1-0102-AILD-K119	001	00	B

LAST SAVE: 2017/04/01 - 10:42am
PATH: C:\pw_workdir\ch2mhill_wbg\sh043264\d0356273\1-0102-AILD-K119.dwg

PLOT DATE: Apr 01, 2017 - 10:42am
FILE NAME: 1-0102-AILD-K119.dwg