A1 SIZE – 594mm x 841mm

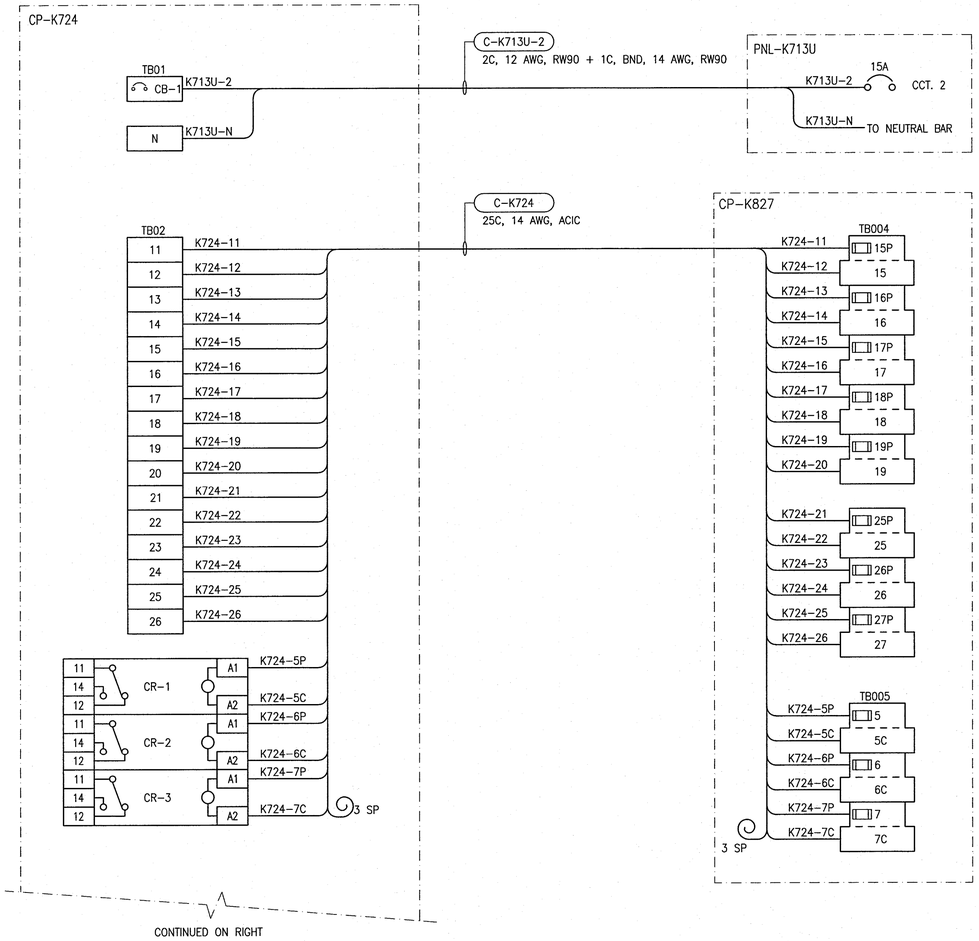

GENERAL NOTES:

1. ALL WIRING TO BE RUN IN CONDUIT UNLESS SPECIFICALLY MARKED AS "ACIC" OR "TECK90" ARMORED CABLE.

SPECIFIC NOTES:

(1) CONDUIT TAGS ARE APPLICABLE THROUGHOUT THE CONDUIT INSTALLATION TO LUMINAIRES. TYPICAL.

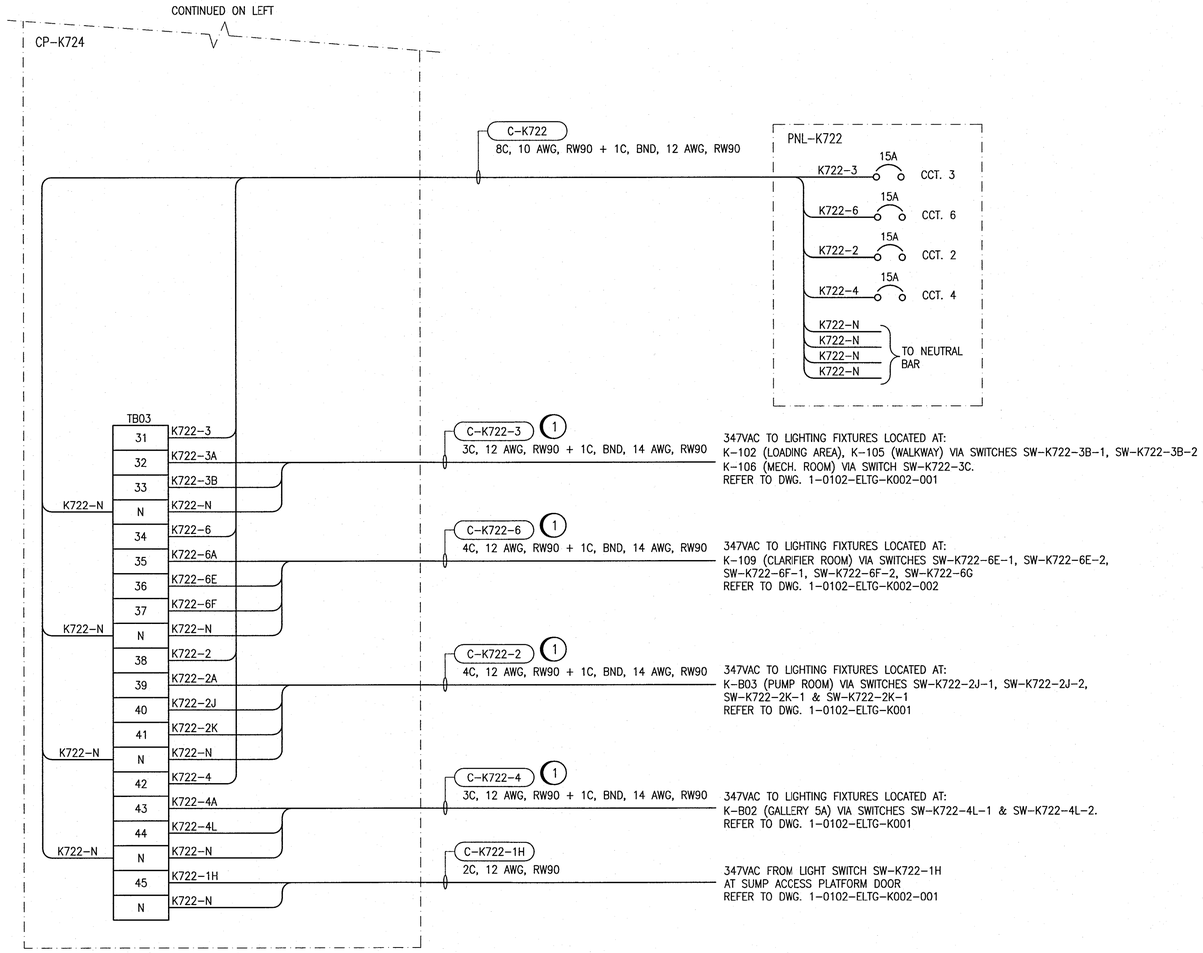

REFERENCE DRAWINGS	DESCRIPTION
1-0102-ECBD-K004	CABINET LAYOUT, CP-K724
1-0102-ESCH-K001	PANEL SCHEDULES & DETAILS

APEGM Certificate of Authorization
SNC-Lavalin Inc.
No. 4489

NO.	REVISIONS	DATE	DESIGN	CHECK
00	ISSUED FOR CONSTRUCTION – 976-2016	2017/04/05	SLJ	DEB

CH2MHILL. SNC·LAVALIN KGS GROUP

DESIGNED BY: S. JUGANAS	CHECKED BY: E. RYCZKOWSKI
DRAWN BY: S. JUGANAS	APPROVED BY: D. BECKER
SCALE: NTS	ISSUED FOR CONSTRUCTION BY: J. SHUMKA
DATE: 2015/03/09	DATE: 2017/04/05
CONSULTANT NO.: 474248	

ENGINEER'S SEAL
PROVINCE OF MANITOBA
D.E. BECKER
Member 23646
REGISTERED PROFESSIONAL ENGINEER
April 5/ 2017

Winnipeg
THE CITY OF WINNIPEG
WATER AND WASTE DEPARTMENT

SOUTH END WATER POLLUTION CONTROL CENTRE
SEWPCC UPGRADING/EXPANSION PROJECT
ELECTRICAL – INTERIOR LIGHTING CONTROL
HIGH RATE CLARIFICATION BUILDING
CP-K724 SCHEMATIC AND WIRING DIAGRAM

CITY DRAWING NUMBER	SHEET	REV.	SIZE
1-0102-ELTG-K004	002	00	A1

LAST SAVE: 2017/03/24 – 9:42am
PATH: C:\DWG\1-0102-ELTG-K004-002.dwg

PLOT DATE: Mar 24, 2017 – 9:42am
FILE NAME: 1-0102-ELTG-K004-002.dwg