A1 SIZE – 594mm x 841mm

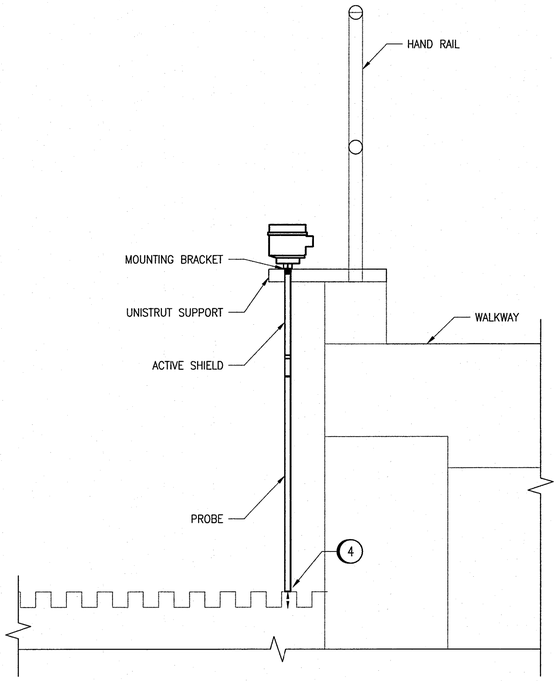

A CLARIFIER TANK LEVEL SWITCH
NTS

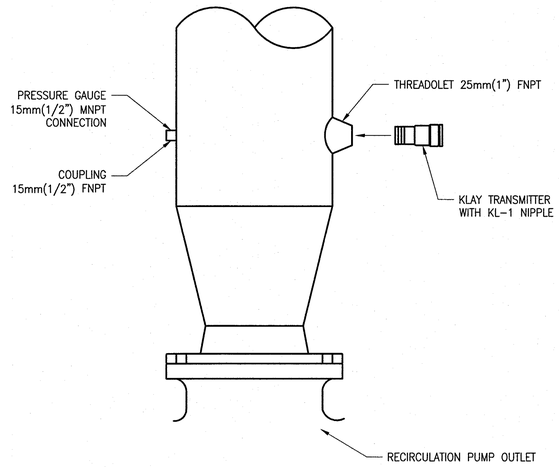

B RECIRCULATION PUMP PRESSURE TRANSMITTERS
NTS

SPECIFIC NOTES:

1. PROVIDE MOUNTING PLATE AND HOLDER TO ALLOW REMOVAL OF SENSORS FROM TOP OF CHANNEL.
2. COORDINATE OPTIMAL SENSOR LOCATIONS WITH FLOW METER VENDOR.
3. PROVIDE VENDOR SUPPLIED CONNECTORS TO BE ABLE TO FULLY REMOVE MOUNTING PLATE FROM CHANNEL.
4. COORDINATE SENSOR LENGTH WITH HRC VENDOR REQUIREMENTS.

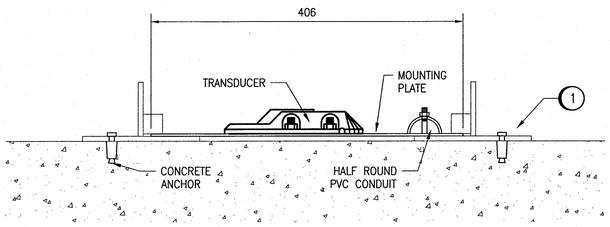

C FLOW TRANSDUCER MOUNTING DETAIL
NTS

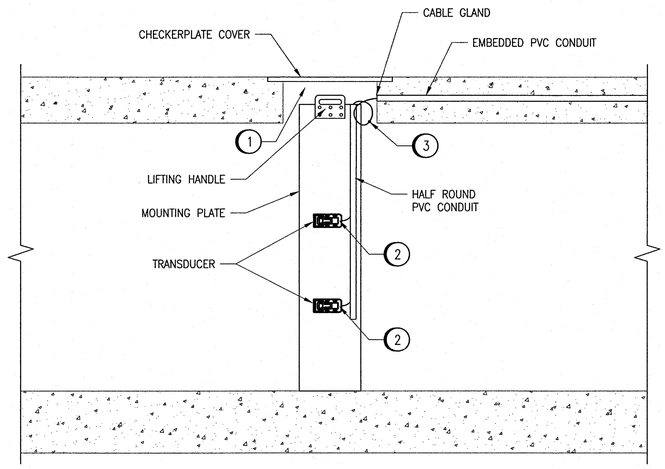

D INFLUENT CHANNEL FLOW TRANSDUCER DETAIL
NTS

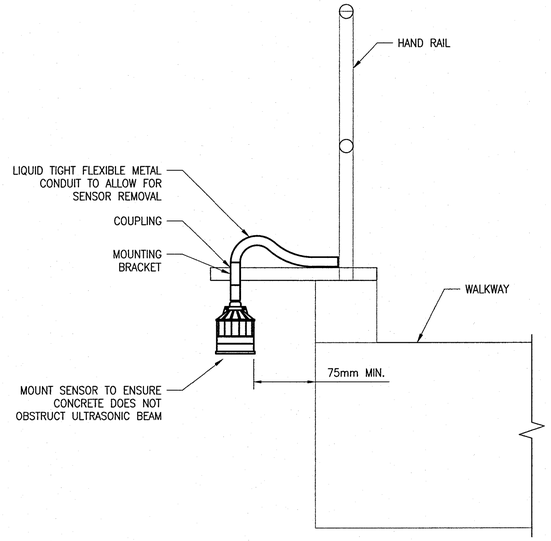

E MATURATION TANK LEVEL SENSOR
NTS

APEGM
Certificate of Authorization
SNC-Lavalin Inc.
No. 4489

NO.	REVISIONS	DATE	DESIGN	CHECK
00	ISSUED FOR CONSTRUCTION – 976-2016	2017/04/05	SSB	TMC

CH2MHILL. SNC·LAVALIN KGS GROUP

DESIGNED BY: S. BOGHOSIAN	CHECKED BY: T. CHURCH
DRAWN BY: MJ. PERSSON	APPROVED BY: E. RYCZKOWSKI
SCALE: NTS	ISSUED FOR CONSTRUCTION BY: J. SHUMKA
DATE: 2015/09/02	DATE: 2017/04/05
CONSULTANT NO.: 474248	

ENGINEER'S SEAL
PROVINCE OF MANITOBA
T.M. CHURCH
Member 32682
REGISTERED PROFESSIONAL ENGINEER
Apr. 5, 2017

Winnipeg
THE CITY OF WINNIPEG
WATER AND WASTE DEPARTMENT

SOUTH END WATER POLLUTION CONTROL CENTRE
SEWPCC UPGRADING/EXPANSION PROJECT
AUTOMATION – INSTALLATION DETAILS
HIGH RATE CLARIFICATION BUILDING
MISCELLANEOUS

CITY DRAWING NUMBER	SHEET	REV.	SIZE
1-0102-ADTL-K002	001	00	A1

PLOT DATE: Apr 03, 2017 – 9:28am
FILE NAME: 1-0102-ADTL-K002.dwg

LAST SAVE: 2017/04/03 – 9:28am
PATH: C:\pw_workdir\ch2mhill_wbg\ve006717\d0356273\1-0102-ADTL-K002.dwg