A1 SIZE – 594mm x 841mm

## SCHEMATIC

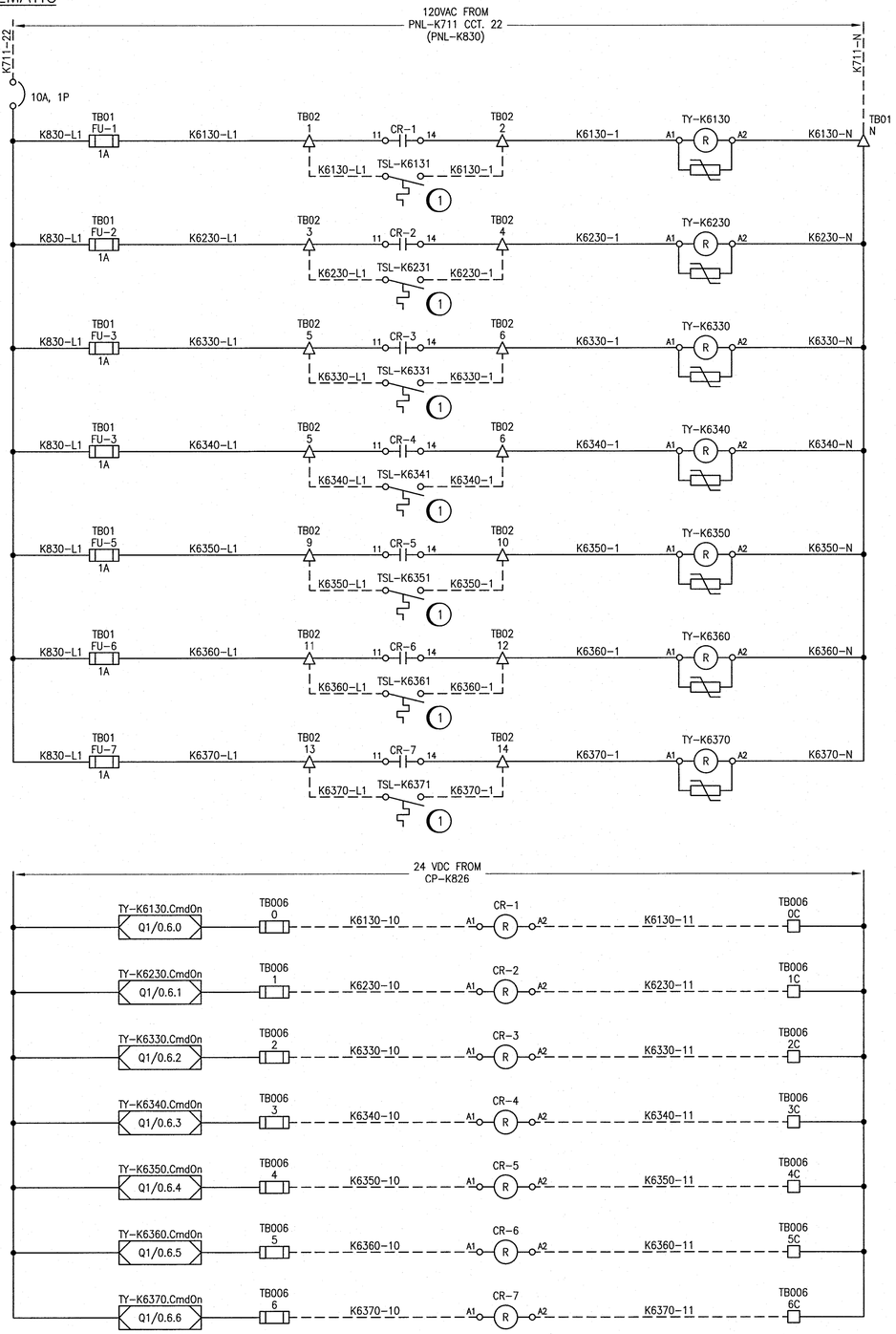


## FIELD CONNECTION DIAGRAM

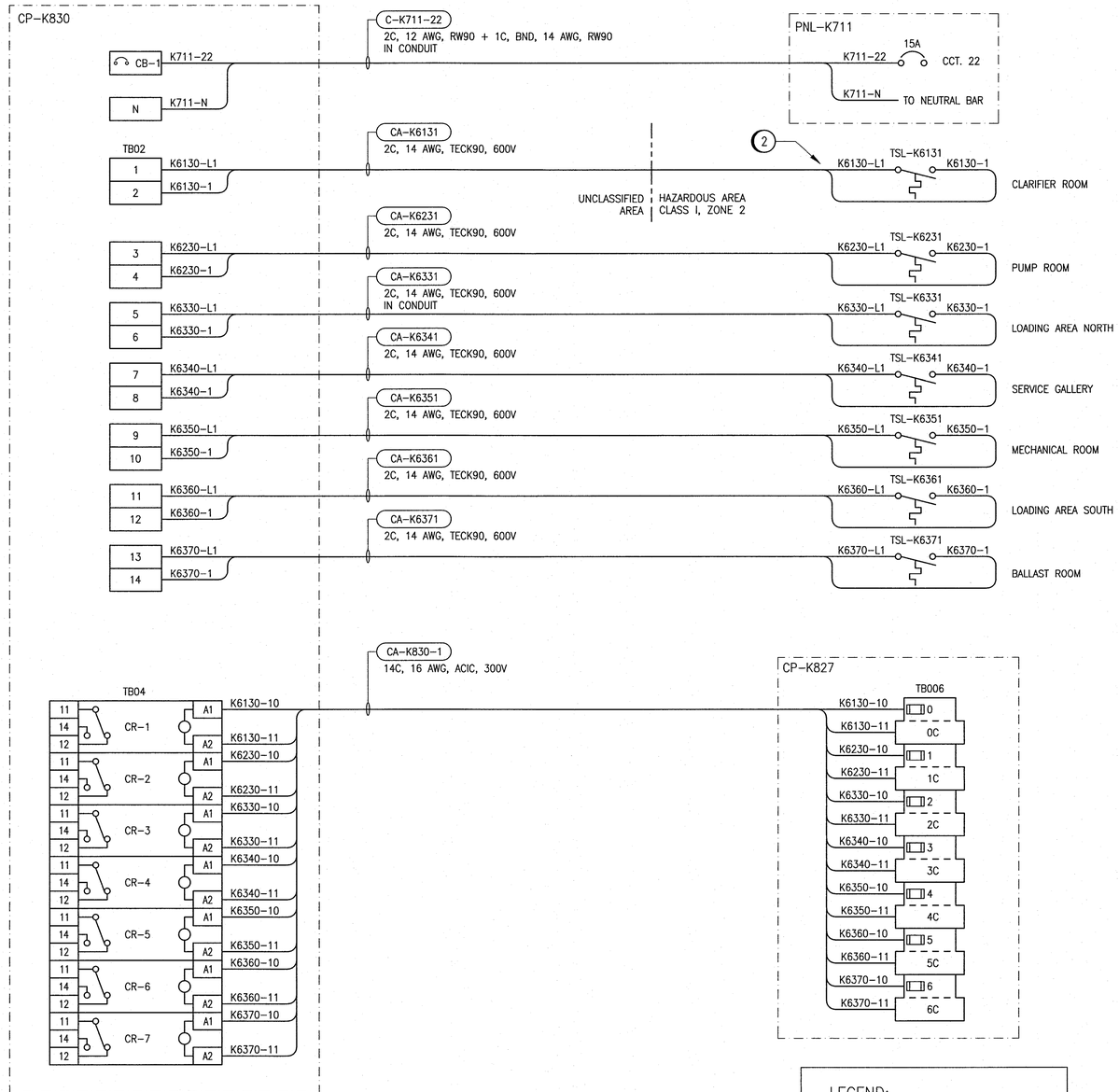


## SPECIFIC NOTES:

1. OVERRIDE THERMOSTAT SET AT 5C°.
2. PROVIDE HAZARDOUS RATED CABLE GLAND SEAL.

## LEGEND:

- □ CP-K827 TERMINAL
- △ CP-K830 TERMINAL
- (R) CONTROL RELAY COIL
- (C) CONTACTOR COIL
- ▭ PLC-K806 DISCRETE OUTPUT RIO-K806-1

## NOTES:

1. RELAYS LOCATED IN CP-K830 UNLESS SHOWN OTHERWISE.

| REFERENCE DRAWINGS | DESCRIPTION |
|---|---|
| 1-0102-ACBD-K040 | CP-K827 RIO-K806-1 DESCRETE OUTPUT |
| 1-0102-ACBD-K061 | CABINET LAYOUT, UNIT HEATERS CONTROL PANEL CP-K830 |

APEGM Certificate of Authorization
SNC-Lavalin Inc.
No. 4489

| NO. | REVISIONS | DATE | DESIGN | CHECK |
|---|---|---|---|---|
| 00 | ISSUED FOR CONSTRUCTION – 976-2016 | 2017/04/05 | SSB | TMC |

CH2MHILL. SNC·LAVALIN KGS GROUP

| | |
|---|---|
| DESIGNED BY: S. BOGHOSIAN | CHECKED BY: T. CHURCH |
| DRAWN BY: S. BOGHOSIAN | APPROVED BY: E. RYCZKOWSKI |
| SCALE: NTS | ISSUED FOR CONSTRUCTION BY: J. SHUMKA |
| DATE: 2015/07/27 | DATE: 2017/04/05 |
| CONSULTANT NO.: 474248 | |

ENGINEER'S SEAL
PROVINCE OF MANITOBA
T.M. CHURCH
Member 32682
REGISTERED PROFESSIONAL ENGINEER
Apr. 4, 2017

Winnipeg
THE CITY OF WINNIPEG
WATER AND WASTE DEPARTMENT

SOUTH END WATER POLLUTION CONTROL CENTRE
SEWPCC UPGRADING/EXPANSION PROJECT
ELECTRICAL – MOTOR STARTER SCHEMATIC
HIGH RATE CLARIFICATION BUILDING
UNIT HEATERS K613, K623, K633, K634, K635, K636, K637

| CITY DRAWING NUMBER | SHEET | REV. | SIZE |
|---|---|---|---|
| 1-0102-EMCL-K614 | 002 | 00 | A1 |

LAST SAVE: 2017/03/24 – 9:54am
PATH: C:\DWG\1-0102-EMCL-K614-002.dwg

PLOT DATE: Mar 24, 2017 – 9:54am

FILE NAME:1-0102-EMCL-K614-002.dwg