B SIZE – 279mm x 432mm

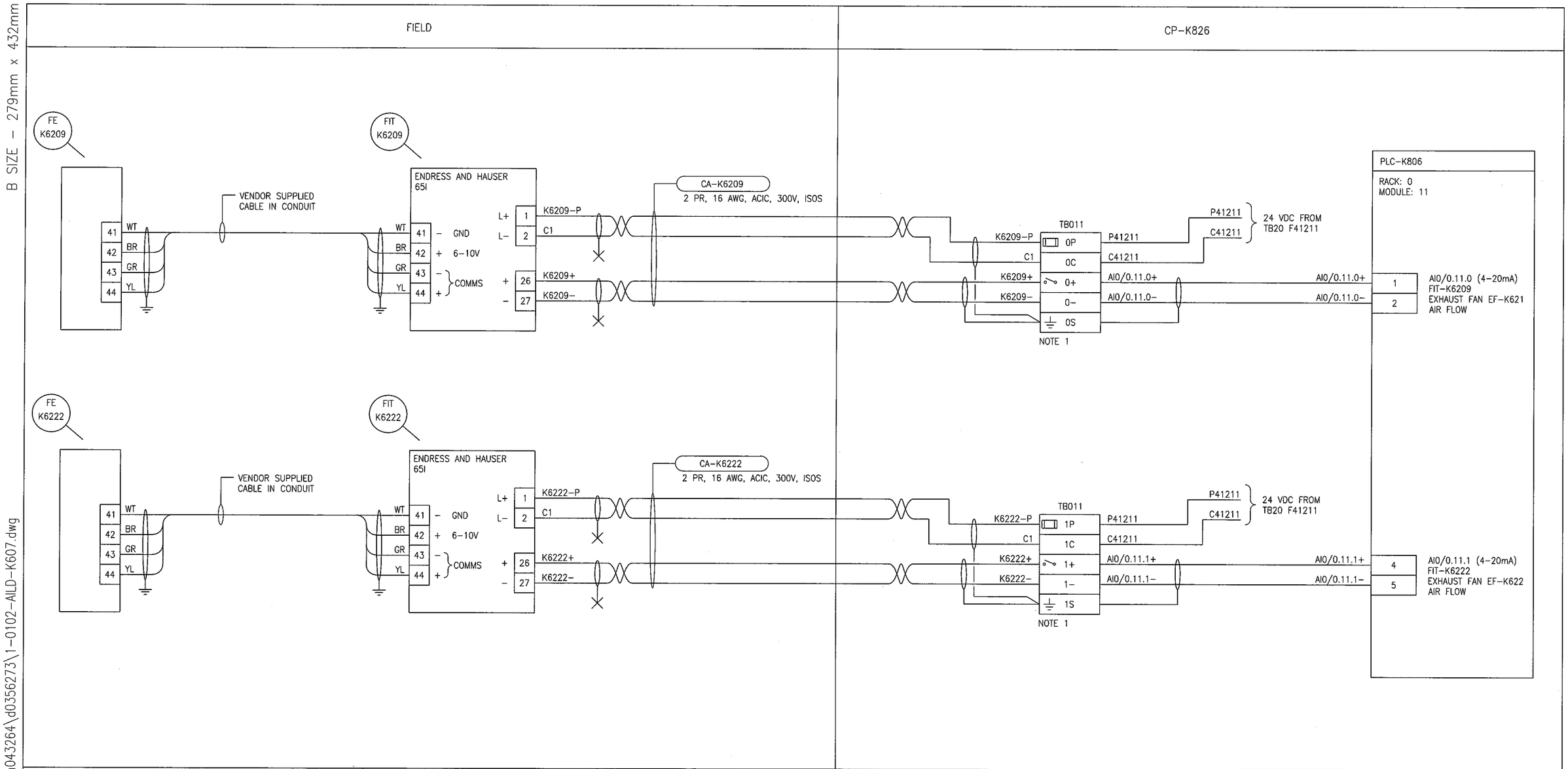

NOTES

1. GROUNDED TERMINALS CONNECTED TO ISOLATED GROUND THROUGH DIN RAIL.

APEGM Certificate of Authorization
SNC-Lavalin Inc.
No. 4489

NO.	REVISIONS	DATE	DESIGN	CHECK
00	ISSUED FOR CONSTRUCTION – 976–2016	2017/04/05	SSB	TMC

SNC·LAVALIN CH2MHILL KGS GROUP CONSULTING ENGINEERS

DESIGNED BY: S. BOGHOSIAN	CHECKED BY: T. CHURCH
DRAWN BY: MJ. PERSSON	APPROVED BY: E. RYCZKOWSKI
SCALE: NTS	DATE: 2016/09/09
ISSUED FOR CONSTRUCTION BY: J. SHUMKA	DATE: 2017/04/05
CONSULTANT NO.: 474248	

ENGINEER'S SEAL
PROVINCE OF MANITOBA
T. M. CHURCH
Member 32682
REGISTERED PROFESSIONAL ENGINEER
Apr. 5, 2017

Winnipeg
THE CITY OF WINNIPEG
WATER AND WASTE DEPARTMENT

SOUTH END WATER POLLUTION CONTROL CENTRE
SEWPCC UPGRADING/EXPANSION PROJECT
AUTOMATION – LOOP DIAGRAM
FIT–K6209 AND FIT–K6222
EF–K621 AND EF–K622 EXHAUST FANS FLOW TRANSMITTERS

CITY DRAWING NUMBER	SHEET	REV.	SIZE
1–0102–AILD–K607	001	00	B

LAST SAVE: 2017/04/01 – 10:45am
PATH: C:\pw_workdir\ch2mhill_wbg\sh043264\d0356273\1–0102–AILD–K607.dwg

PLOT DATE: Apr 01, 2017 – 10:45am
FILE NAME: 1–0102–AILD–K607.dwg