A1 SIZE – 594mm x 841mm

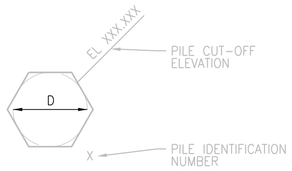

1 DETAIL
NTS

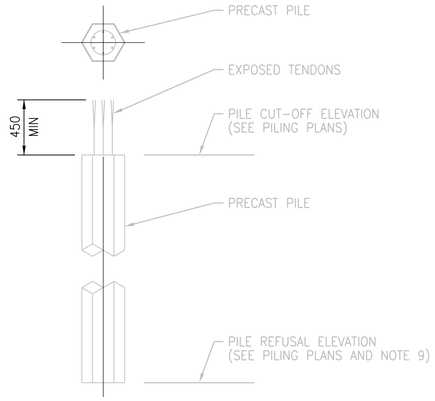

TYPICAL PILE CUT-OFF

2 DETAIL
1:25

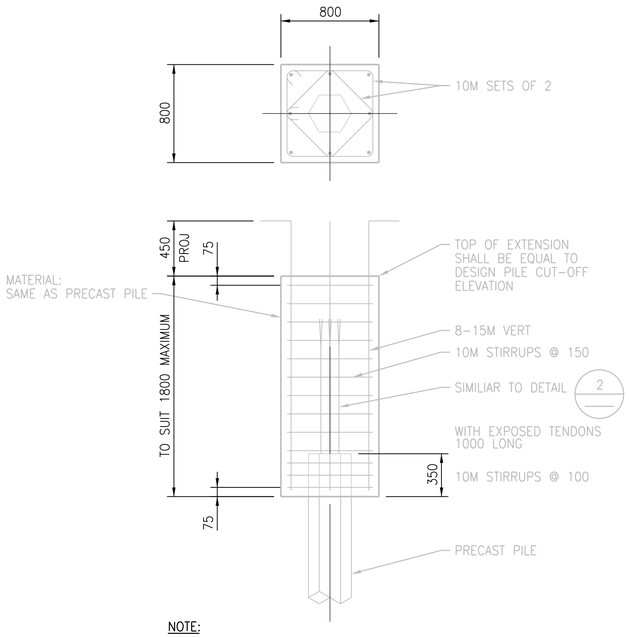

NOTE:

1. THIS PILE EXTENSION DETAIL APPLIES TO PILES DRIVEN A MAXIMUM OF 900mm LOWER THAN EXPECTED.

TYPICAL CAST IN PLACE PILE EXTENSION

3 DETAIL
1:25

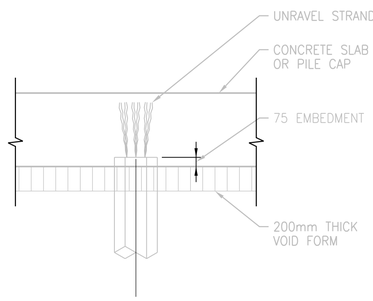

4 DETAIL
1:25

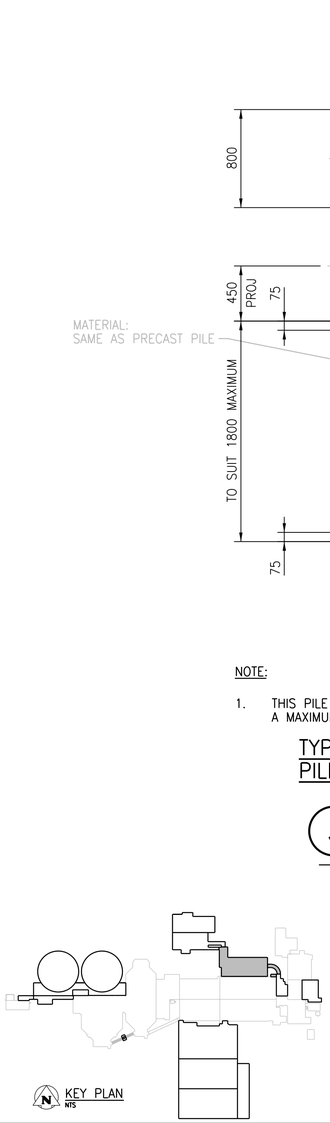

KEY PLAN
NTS

NOTES:

1. REFER TO DWG 1-0102-SAAA-A001 FOR GENERAL NOTES.
2. PILE DIAMETER (D) = 300mm FOR INLET CHANNEL
3. PILES CUT-OFF ELEVATION = 231.975 FOR INLET CHANNEL.
4. ESTIMATED PILE REFUSAL EL 212.000

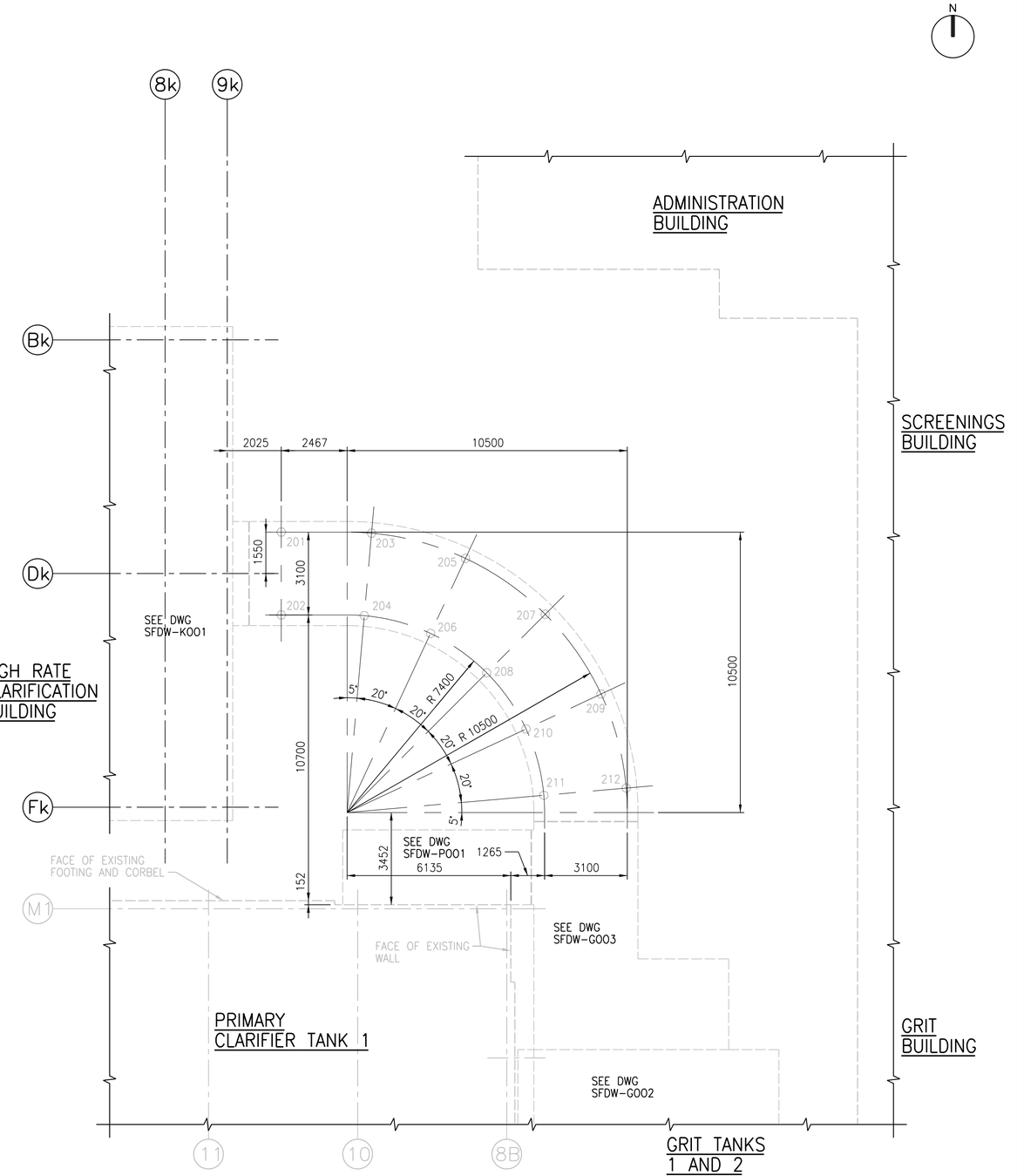

INLET CHANNEL PILING PLAN
1:100

©CH2M HILL 2017. ALL RIGHTS RESERVED.

APEGM
Certificate of Authorization
CH2M HILL Canada Ltd.
No. 1441

NO.	REVISIONS	DATE	DESIGN	CHECK
02	ISSUED FOR CONSTRUCTION – 976-2016	2017/04/05	G.O.	J.C.
01	ISSUED FOR CONSTRUCTION	10/2015	G.O.	J.C.
00	ISSUED FOR TENDER	08/2015	G.O.	J.C.

PLOT DATE: 2017\04\02

CH2MHILL
SNC·LAVALIN
KGS GROUP

DESIGNED BY: E. LUI	CHECKED BY: R. PARIKH
DRAWN BY: G. OMORI	APPROVED BY: H.T. FREIHAMMER
SCALE: 1:100	ISSUED FOR CONSTRUCTION BY: J. SHUMKA
DATE: 2017/04/05	DATE: 2017/04/05
CONSULTANT NO.: 474248	

ENGINEER'S SEAL
APR 5, 2017
PROVINCE OF MANITOBA
S.K.E. LUI
Member 37003
REGISTERED PROFESSIONAL ENGINEER

FILE NAME:

Winnipeg
THE CITY OF WINNIPEG
WATER AND WASTE DEPARTMENT

SOUTH END WATER POLLUTION CONTROL CENTRE
SEWPCC UPGRADING/EXPANSION PROJECT
STRUCTURAL
HIGH RATE CLARIFICATION BUILDING
INLET CHANNEL PILING PLAN

CITY DRAWING NUMBER	SHEET	REV.	SIZE
1-0102-SFDW-K002		02	A1