A1 SIZE – 594mm x 841mm

ELEMENTARY DIAGRAM:

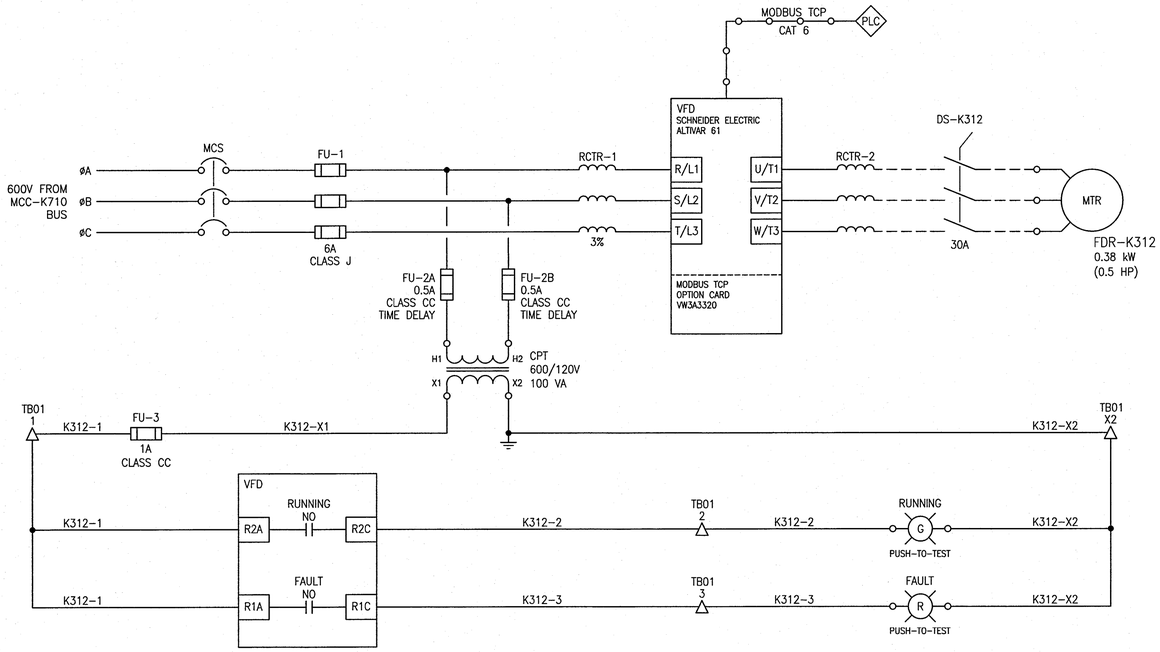

FIELD CONNECTION DIAGRAM:

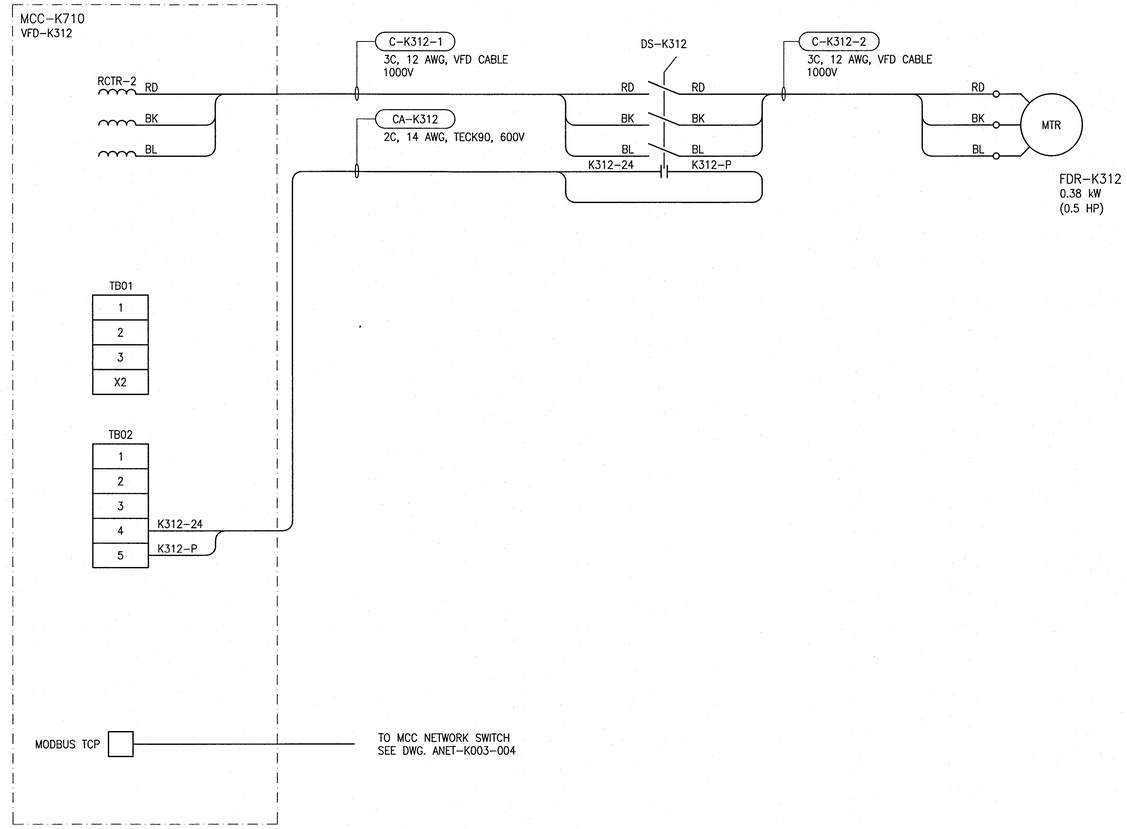

VFD SETTINGS NOTES:

1. IN HAND MODE, THE VFD TO OPERATE AT RATED SPEED.
2. "DISCONNECT OPENED" IS TO ISSUE STOP COMMAND TO THE VFD.

LEGEND:

△ MCC TERMINAL

REFERENCE DRAWINGS	DESCRIPTION
--	--

NOTES

1.

APEGM
Certificate of Authorization
SNC-Lavalin Inc.
No. 4489

NO.	REVISIONS	DATE	DESIGN	CHECK
00	ISSUED FOR CONSTRUCTION – 976-2016	2017/04/05	SSB	TMC

CH2MHILL. SNC·LAVALIN KGS GROUP

DESIGNED BY: S. BOGHOSIAN	CHECKED BY: T. CHURCH
DRAWN BY: S. BOGHOSIAN	APPROVED BY: E. RYCZKOWSKI
SCALE: NTS	ISSUED FOR CONSTRUCTION BY: J. SHUMKA
DATE: 2016/11/18	DATE: 2017/04/05
CONSULTANT NO.: 474248	

ENGINEER'S SEAL
PROVINCE OF MANITOBA
T. M. CHURCH
Member
32682
REGISTERED PROFESSIONAL ENGINEER
Apr. 4, 2017

Winnipeg
THE CITY OF WINNIPEG
WATER AND WASTE DEPARTMENT

SOUTH END WATER POLLUTION CONTROL CENTRE
SEWPCC UPGRADING/EXPANSION PROJECT
ELECTRICAL – MOTOR STARTER SCHEMATIC
HIGH RATE CLARIFICATION BUILDING
FDR-K312 BALLAST ADDITIONAL SYSTEM FEEDER

CITY DRAWING NUMBER	SHEET	REV.	SIZE
1-0102-EMCL-K302	001	00	A1

LAST SAVE: 2017/03/24 – 9:53am
PATH: C:\DWG\1-0102-EMCL-K302.dwg

PLOT DATE: Mar 24, 2017 – 9:53am

FILE NAME: 1-0102-EMCL-K302.dwg