A1 SIZE – 594mm x 841mm

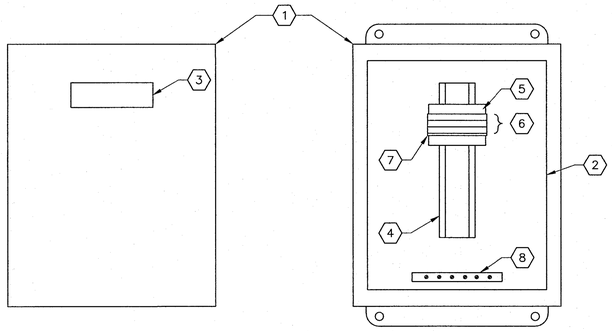

EXTERIOR PANEL VIEW
1 : 3

INTERIOR PANEL VIEW
1 : 3

TYPICAL DEVICE JUNCTION BOX

BILL OF MATERIAL

ITEM	QTY	DESCRIPTION	MANUFACTURER	CATALOG NUMBER
1	AS REQ'D	NEMA 4 ENCL. WALL MOUNT – 254x203x102mm	HOFFMAN	A1008CHNF
2	AS REQ'D	PANEL FOR ITEM 1	HOFFMAN	A10P8
3	AS REQ'D	LAMACOIDS	–	
4	AS REQ'D	35mm DIN RAIL	PHOENIX CONTACT	0801733
5	AS REQ'D	TERMINAL END CLAMP – CLIPFIX 35	PHOENIX CONTACT	3022218
6	AS REQ'D	FEED THROUGH TERMINAL – UT 4–MTD	PHOENIX CONTACT	3046184
7	AS REQ'D	TERMINAL END PLATE – D–UT 2,5/4 TWIN	PHOENIX CONTACT	3047141
8	AS REQ'D	GROUND BAR, 6 TAPS	ILSCO	0167–6

JUNCTION BOX SCHEDULE

IDENTIFIER	NUMBER OF TERMINALS	DESCRIPTION
JBA–K114–1	6	SOLENOID VALVES
JBA–K124–1	6	SOLENOID VALVES
JBA–K310–1	4	BALLAST SYSTEM SOLENOID VALVES
JBA–K3102	2	BALLAST SYSTEM LEVEL SWITCH
JBA–K5012	3	SUMP LEVEL SWITCH
JBA–K6111	7	EXHAUST FAN EF–K611 DAMPER XV–K6111
JBA–K6113	7	EXHAUST FAN EF–K611 DAMPER XV–K6113
JBA–K6121	7	EXHAUST FAN EF–K612 DAMPER XV–K6121
JBA–K6123	7	EXHAUST FAN EF–K612 DAMPER XV–K6123
JBA–K6211	7	EXHAUST FAN EF–K621 DAMPER XV–K6211
JBA–K6221	7	EXHAUST FAN EF–K622 DAMPER XV–K6221
JBA–K6311	7	EXHAUST FAN EF–K631 DAMPER XV–K6311
JBA–K831	7	HRC TRAIN 1&2 LEVEL TRANSMITTERS
JBA–K9601	3	STAIRWELL WEST DOOR SWITCH
JBA–K9602	3	STAIRWELL NORTH DOOR SWITCH
JBA–K9603	3	STAIRWELL ROOFTOP DOOR SWITCH
JBA–K9621	3	OVERHEAD DOOR SWITCH
JBA–K9631	3	ELECTRICAL ROOM DOOR SWITCH
JBA–K115–1	4	SOLENOID VALVES

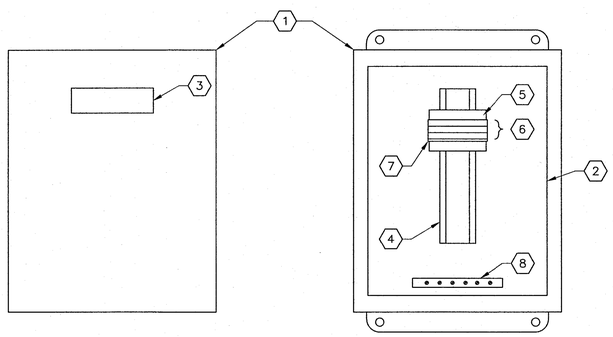

EXTERIOR PANEL VIEW
1 : 3

INTERIOR PANEL VIEW
1 : 3

TYPICAL DEVICE JUNCTION BOX

BILL OF MATERIAL

ITEM	QTY	DESCRIPTION	MANUFACTURER	CATALOG NUMBER
1	AS REQ'D	NEMA 4X ENCL. WALL MOUNT – 254x203x102mm	HOFFMAN	A1008CHNFSS6
2	AS REQ'D	PANEL FOR ITEM 1	HOFFMAN	A10P8
3	AS REQ'D	LAMACOIDS	–	
4	AS REQ'D	35mm DIN RAIL	PHOENIX CONTACT	0801733
5	AS REQ'D	TERMINAL END CLAMP – CLIPFIX 35	PHOENIX CONTACT	3022218
6	AS REQ'D	FEED THROUGH TERMINAL – UT 4–MTD	PHOENIX CONTACT	3046184
7	AS REQ'D	TERMINAL END PLATE – D–UT 2,5/4 TWIN	PHOENIX CONTACT	3047141
8	AS REQ'D	GROUND BAR, 6 TAPS	ILSCO	0167–6

JUNCTION BOX SCHEDULE

IDENTIFIER	NUMBER OF TERMINALS	DESCRIPTION
JBA–K1140	3	SCRAPER DRIVE TORQUE TRANSDUCER
JBA–K1240	3	SCRAPER DRIVE TORQUE TRANSDUCER
JBA–K1132	3	TANK TK–K113 LEVEL TRANSMITTER
JBA–K1232	3	TANK TK–K123 LEVEL TRANSMITTER
JBA–K6142	9	WASTE SLUDGE SUMP EXHAUST DAMPER

REFERENCE DRAWINGS	DESCRIPTION
--	--

1:3 30 0 60 120

APEGM Certificate of Authorization
SNC-Lavalin Inc.
No. 4489

NO.	REVISIONS	DATE	DESIGN	CHECK
00	ISSUED FOR CONSTRUCTION – 976–2016	2017/04/05	SSB	TMC

CH2MHILL. SNC·LAVALIN KGS GROUP

DESIGNED BY: S. BOGHOSIAN	CHECKED BY: T. CHURCH
DRAWN BY: S. BOGHOSIAN	APPROVED BY: E. RYCZKOWSKI
SCALE: 1:3	ISSUED FOR CONSTRUCTION BY: J. SHUMKA
DATE: 2015/02/17	DATE: 2017/04/05
CONSULTANT NO.: 474248	

ENGINEER'S SEAL
PROVINCE OF MANITOBA
T. M. CHURCH
Member 32682
REGISTERED PROFESSIONAL ENGINEER
Apr. 5, 2017

Winnipeg
THE CITY OF WINNIPEG
WATER AND WASTE DEPARTMENT

SOUTH END WATER POLLUTION CONTROL CENTRE
SEWPCC UPGRADING/EXPANSION PROJECT
AUTOMATION – CABINET LAYOUT
HIGH RATE CLARIFICATION BUILDING
JUNCTION BOXES

CITY DRAWING NUMBER	SHEET	REV.	SIZE
1–0102–ACBD–K051	001	00	A1

LAST SAVE: 2017/04/01 – 2:15pm
PATH: C:\pw_workdir\ch2mhill_wbg\sn043264\d0356391\1-0102-ACBD-K051-001.dwg

PLOT DATE: Apr 01, 2017 – 2:15pm

FILE NAME: 1–0102–ACBD–K051–001.dwg