B SIZE - 279mm x 432mm

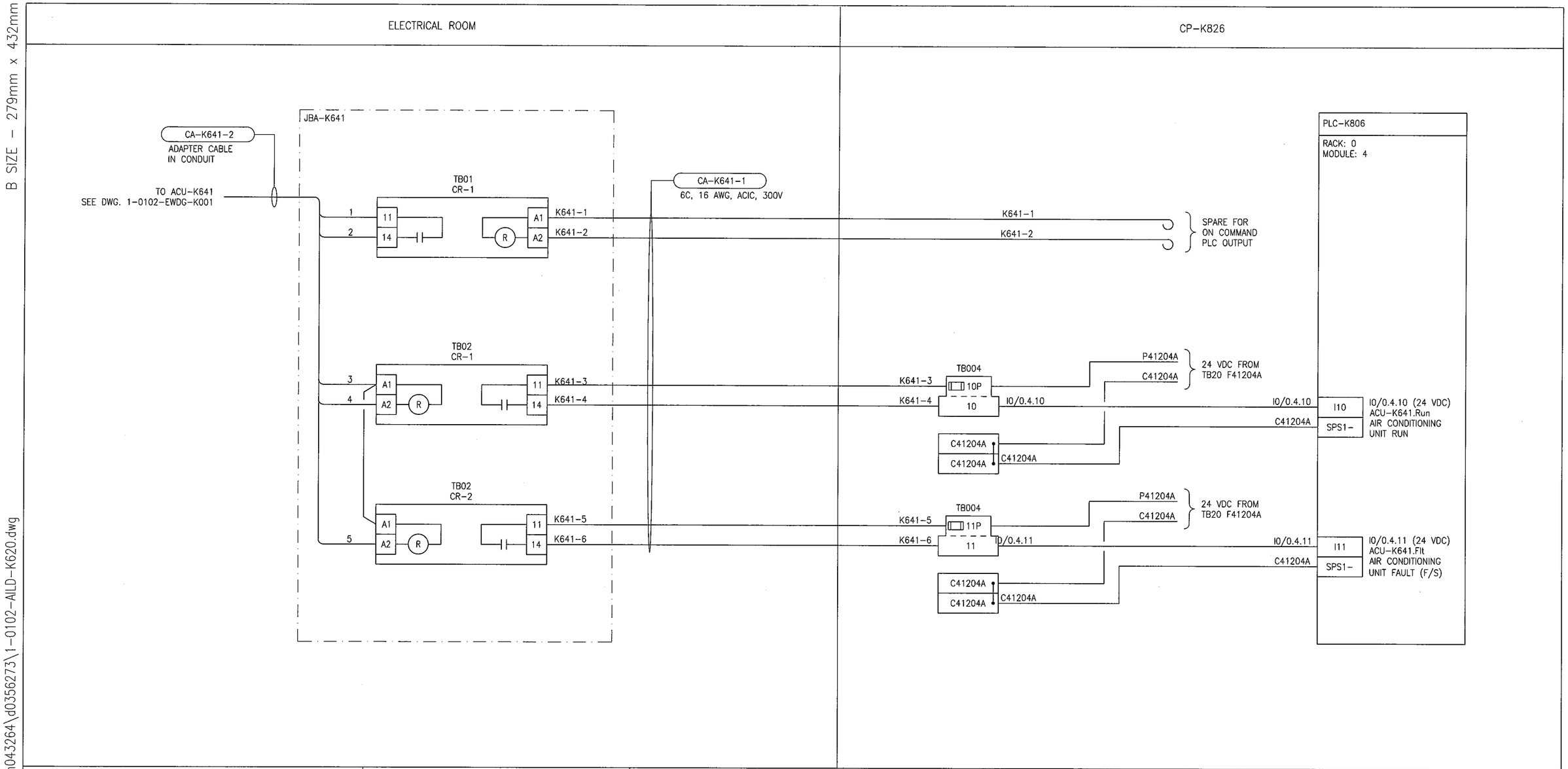


SNC·LAVALIN CH2MHILL KGS GROUP CONSULTING ENGINEERS

| NO. | REVISIONS | DATE | DESIGN | CHECK |
|---|---|---|---|---|
| 00 | ISSUED FOR CONSTRUCTION - 976-2016 | 2017/04/05 | SSB | TMC |

| | |
|---|---|
| DESIGNED BY: S. BOGHOSIAN | CHECKED BY: T. CHURCH |
| DRAWN BY: M. WANG | APPROVED BY: E. RYCZKOWSKI |
| SCALE: NTS | DATE: 2015/08/21 |
| ISSUED FOR CONSTRUCTION BY: J. SHUMKA | DATE: 2017/04/05 |
| CONSULTANT NO.: 474248 | |

ENGINEER'S SEAL

PROVINCE OF MANITOBA
T.M. CHURCH
Member
32682
REGISTERED PROFESSIONAL ENGINEER
Apr. 5, 2017

APEGM Certificate of Authorization
SNC-Lavalin Inc.
No. 4489

Winnipeg

THE CITY OF WINNIPEG
WATER AND WASTE DEPARTMENT

SOUTH END WATER POLLUTION CONTROL CENTRE
SEWPCC UPGRADING/EXPANSION PROJECT
AUTOMATION - LOOP DIAGRAM
CU-K641 AND ACU-K641
ELECTRICAL ROOM AIR CONDITIONING UNIT

| CITY DRAWING NUMBER | SHEET | REV. | SIZE |
|---|---|---|---|
| 1-0102-AILD-K620 | 001 | 00 | B |

LAST SAVE: 2017/04/01 - 10:46am
PATH: C:\pw_workdir\ch2mhill_wbg\sh043264\d0356273\1-0102-AILD-K620.dwg

PLOT DATE: Apr 01, 2017 - 10:46am

FILE NAME: 1-0102-AILD-K620.dwg