A1 SIZE – 594mm x 841mm

REINFORCING BAR YIELD STRENGTH = 400MPa								
SPECIFIED CONCRETE STRENGTH	BAR LOCATION	LAP TYPE	BAR SIZE					
			10M	15M	20M	25M	30M	35M
Fc=20MPa	TOP	CLASS A	450	650	850	1350	1600	2000
		CLASS B	550	850	1100	1750	2050	2600
	OTHER	CLASS A	350	500	650	1050	1250	1550
		CLASS B	450	650	850	1350	1600	2000
Fc=25MPa	TOP	CLASS A	400	600	750	1200	1450	1800
		CLASS B	500	750	1000	1550	1850	2300
	OTHER	CLASS A	300	450	600	900	1100	1400
		CLASS B	400	600	750	1200	1450	1800
Fc=30MPa 32MPa	TOP	CLASS A	350	550	700	1100	1300	1650
		CLASS B	450	700	900	1400	1700	2100
	OTHER	CLASS A	300	400	550	850	1000	1250
		CLASS B	350	550	700	1100	1300	1650
Fc=35MPa	TOP	CLASS A	350	500	650	1000	1200	1500
		CLASS B	450	650	850	1300	1550	1950
	OTHER	CLASS A	300	400	500	800	950	1150
		CLASS B	350	500	650	1000	1200	1500
Fc=40MPa	TOP	CLASS A	300	450	600	950	1150	1400
		CLASS B	400	600	800	1250	1450	1850
	OTHER	CLASS A	300	350	500	750	900	1100
		CLASS B	300	450	600	950	1150	1400

NOTES:

1. TOP BARS ARE:
   a) ALL BARS IN CONCRETE WITH MORE THAN 300mm CONCRETE BELOW.
   b) ALL HORIZONTAL BARS IN WALLS.
2. PROVIDE CLASS B LAP UNLESS NOTED OTHERWISE.
3. LAP SPLICE LENGTHS SHOWN IN THE TABLE ARE BASED ON HEAVIER CONFINED BARS.
4. TABLE APPLIES UNLESS SHOWN OTHERWISE.
5. DEVELOPMENT LENGTHS ARE EQUAL TO CLASS A LAP SPLICES.

REINFORCING BAR TENSION LAP SPLICE TABLE

NTS (0330-801)

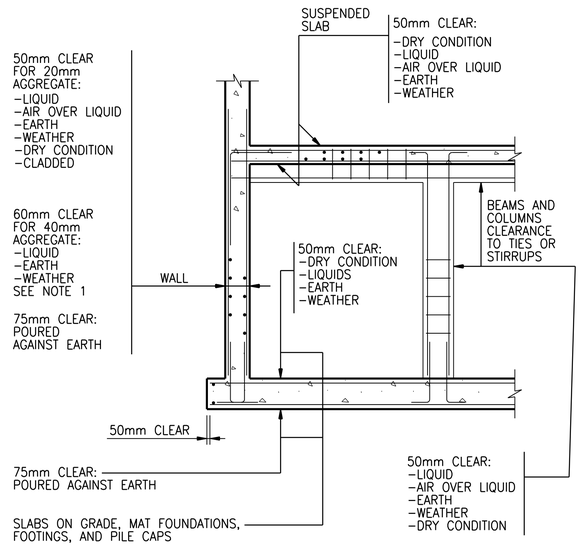

NOTES:

1. PROVIDE 50mm CLEARANCE ON FACE EXPOSED TO DRY CONDITION.
2. SPECIFIED COVER WILL PROVIDE MINIMUM 3 HOUR FIRE RATING. WHERE 4 HOUR FIRE RATING IS REQUIRED, AS NOTED ON DRAWINGS, INCREASE CLEAR COVER FOR WALLS AND COLUMNS TO 62.5mm.

CONCRETE COVER TO REINFORCING

NTS (0330-803)

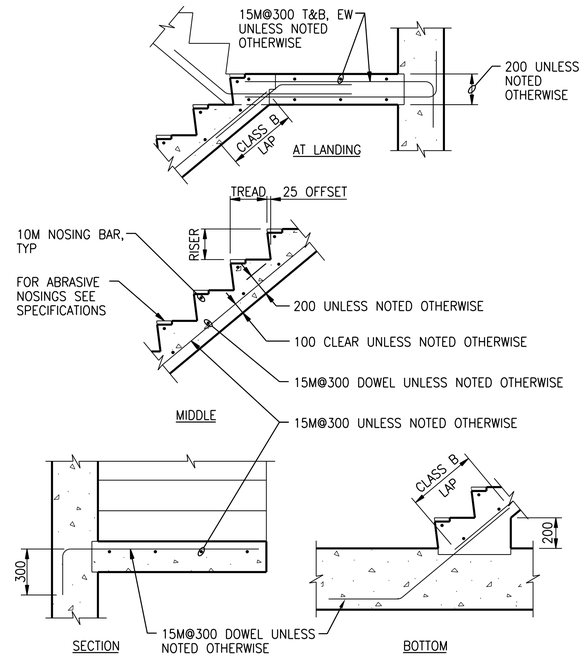

TYPICAL CONCRETE STAIR REINFORCING

NTS (0330-805)

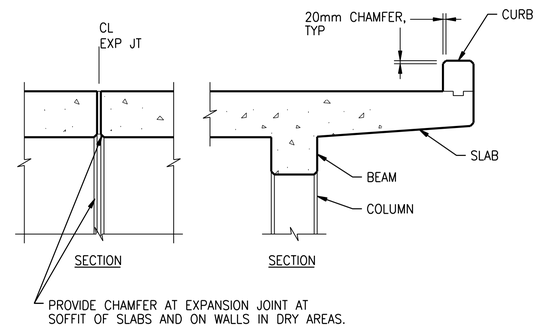

NOTE:
PROVIDE CHAMFER ALONG EXPOSED EDGES ON CONCRETE SLABS, BEAMS, CURBS, COLUMNS, WALL OPENINGS AND SIMILAR ITEMS UNLESS OTHERWISE NOTED OR DIRECTED.

CHAMFERS

NTS (0330-806)

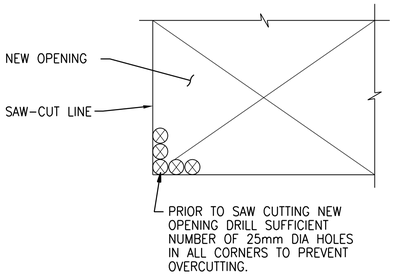

EXISTING WALL ELEVATION OR SLAB PLAN DETAIL

NOTES:

1. LOCATE ANY EXISTING UTILITIES THAT COULD BE AFFECTED WITH DEMOLITION. REPORT TO THE ENGINEER IF ANY UTILITIES ARE FOUND.
2. STAY WITHIN LIMITS OF OPENING, DO NOT OVERCUT.
3. BURN BACK EXPOSED REINFORCING 25mm AND DRY PACK WITH NON SHRINK GROUT.
4. REFER TO DETAIL (0330-143).

NEW OPENING THROUGH EXISTING WALL OR SLAB

NTS (0330-808)

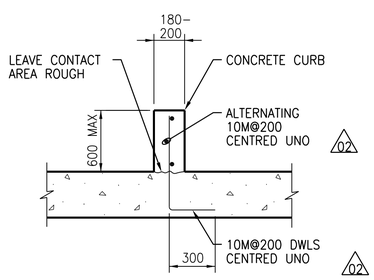

CONCRETE CONTAINMENT CURB

NTS (0330-810)

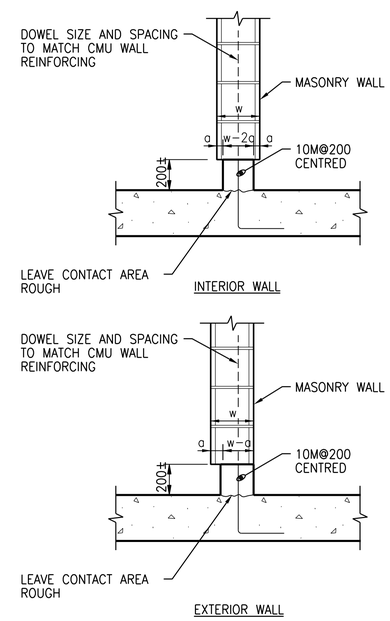

NOTE:
1. o = OVERHANG
   w = WIDTH OF MASONRY WALL

CONCRETE CURB UNDER MASONRY

NTS (0330-811)

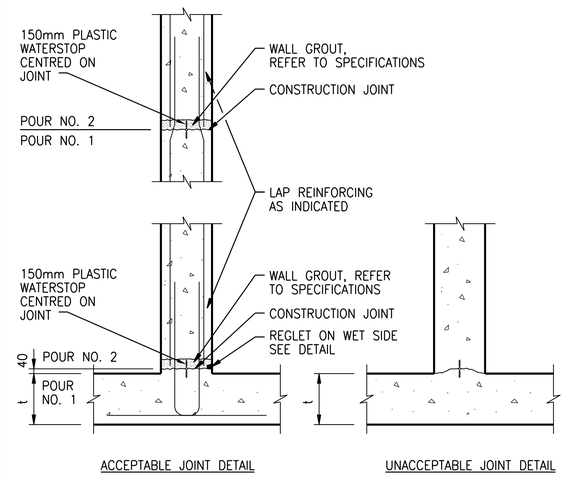

WALLS WITH WATERSTOP

WALL CONSTRUCTION JOINTS

NTS (0330-812)

©CH2M HILL 2017. ALL RIGHTS RESERVED.

APEGM
Certificate of Authorization
CH2M HILL Canada Ltd.
No. 1441

NO.	REVISIONS	DATE	DESIGN	CHECK
04	ISSUED FOR CONSTRUCTION – 976-2016	2017/04/05	G.O.	J.C.
03	ISSUED FOR CONSTR – B.O. 8999-2015	04/2016	G.O.	J.C.
02	ISSUED FOR ADD. 2 – B.O. 899-2015	02/2016	G.O.	J.C.
01	ISSUED FOR CONSTRUCTION	10/2015	G.O.	J.C.
00	ISSUED FOR TENDER	08/2015	G.O.	J.C.

CH2MHILL. KGS GROUP SNC·LAVALIN

DESIGNED BY: J. THANNICKAL
CHECKED BY: E. LUI
DRAWN BY: G.OMORI
APPROVED BY: H.T. FREIHAMMER
SCALE: NTS
ISSUED FOR CONSTRUCTION BY: J. SHUMKA
DATE: 2017/04/05
DATE: 2017/04/05
CONSULTANT NO.: 474248

ENGINEER'S SEAL
APR 5, 2017
PROVINCE OF MANITOBA
LUI
Member 37003
REGISTERED PROFESSIONAL ENGINEER

Winnipeg
THE CITY OF WINNIPEG
WATER AND WASTE DEPARTMENT

SOUTH END WATER POLLUTION CONTROL CENTRE
SEWPCC UPGRADING/EXPANSION PROJECT
STRUCTURAL
STANDARD DETAILS (6)

CITY DRAWING NUMBER: 1-0102-SDTL-A007
SHEET
REV. 04
SIZE A1

PLOT DATE: 2017\03\29
FILE NAME: 1-0102-SDTL-A007.dgn