A1 SIZE – 594mm x 841mm

GENERAL NOTES:

1. CONNECTIONS TO SYSTEM GROUND ELECTRODES SHALL BE 'C' CRIMP PRESSURE CONNECTION OR EXOTHERMIC WELD IN ACCORDANCE WITH CEC 10–806.
2. SAFETY BOND FOR AUTOMATION PANELS ARE CONNECTED THROUGH ASSOCIATED POWER CABLES. FOR AUTOMATION PANELS WITHOUT POWER CABLES, PROVIDE SEPARATE 10 AWG GROUND CONDUCTOR RUN IN CONDUIT CONNECTED TO THE CABLE TRAY BONDING CONDUCTOR.
3. FOR CONDUIT RUNS CONFINED WITHIN THE ELECTRICAL ROOM, EMT MAY BE USED. FOR ANY CONDUITS EXITING THE ELECTRICAL ROOM, RIGID THREADED ALUMINUM CONDUIT SHALL BE USED.
4. ALL WIRES SHALL BE RUN IN CONDUIT. SIZE CONDUITS IN ACCORDANCE WITH THE CEC.

SPECIFIC NOTES:

1. GROUND CONNECTION TO TRANSFORMER X0 TERMINAL.
2. PROVIDE LAMACOID TAG ON WALL, ABOVE THE GROUND CONDUCTORS INDICATING "SAFETY GROUND" AND "ISOLATED GROUND" AS APPLICABLE.

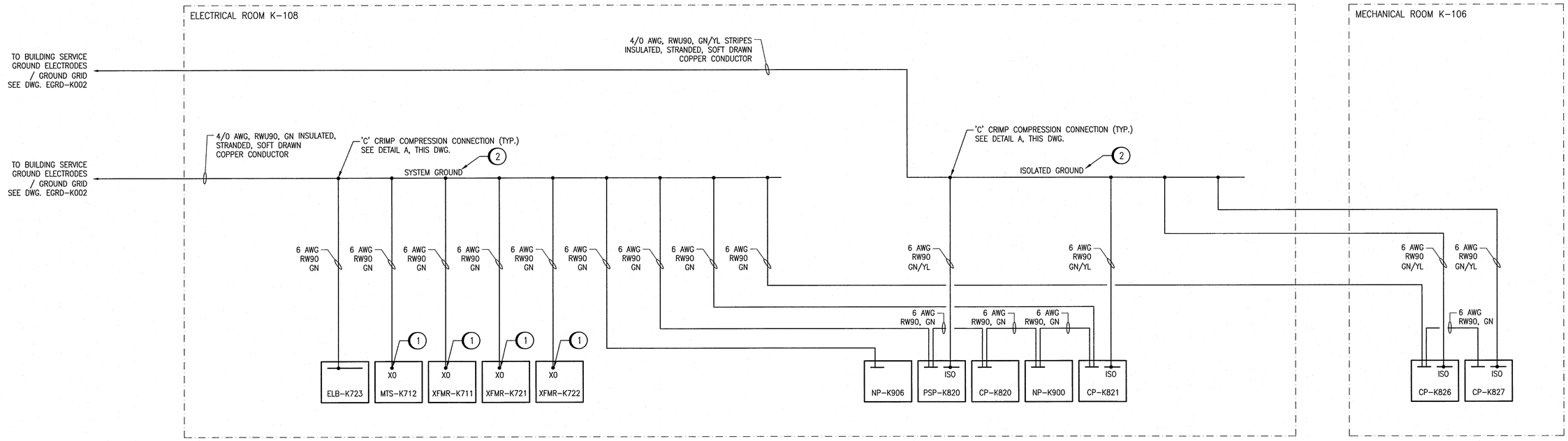

EQUIPMENT GROUNDING SYSTEM

N.T.S.

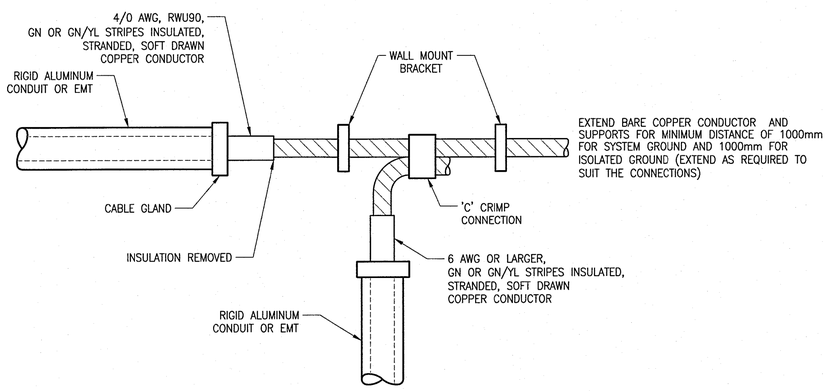

A GROUND CONNECTION POINT DETAIL (TYP.)

NTS

REFERENCE DRAWINGS	DESCRIPTION

APEGM Certificate of Authorization
SNC-Lavalin Inc.
No. 4489

NO.	REVISIONS	DATE	DESIGN	CHECK
00	ISSUED FOR CONSTRUCTION – 976–2016	2017/04/05	MW	DEB

PLOT DATE: Mar 24, 2017 – 9:41am

CH2MHILL. SNC·LAVALIN KGS GROUP

DESIGNED BY: M. WANG	CHECKED BY: E. RYCZKOWSKI
DRAWN BY: M. WANG	APPROVED BY: D. BECKER
SCALE: NTS	ISSUED FOR CONSTRUCTION BY: J. SHUMKA
DATE: 2015/02/02	DATE: 2017/04/05
CONSULTANT NO.: 474248	

ENGINEER'S SEAL
PROVINCE OF MANITOBA
D.E. BECKER
Member
23646
REGISTERED PROFESSIONAL ENGINEER
April 5 2017

Winnipeg
THE CITY OF WINNIPEG
WATER AND WASTE DEPARTMENT

SOUTH END WATER POLLUTION CONTROL CENTRE
SEWPCC UPGRADING/EXPANSION PROJECT
ELECTRICAL – GROUNDING
HIGH RATE CLARIFICATION BUILDING
RISER DIAGRAM

CITY DRAWING NUMBER	SHEET	REV.	SIZE
1–0102–EGRD–K001	001	00	A1

FILE NAME:1–0102–EGRD–K001.dwg

LAST SAVE: 2017/03/24 – 9:41am
PATH: C:\DWG\1–0102–EGRD–K001.dwg