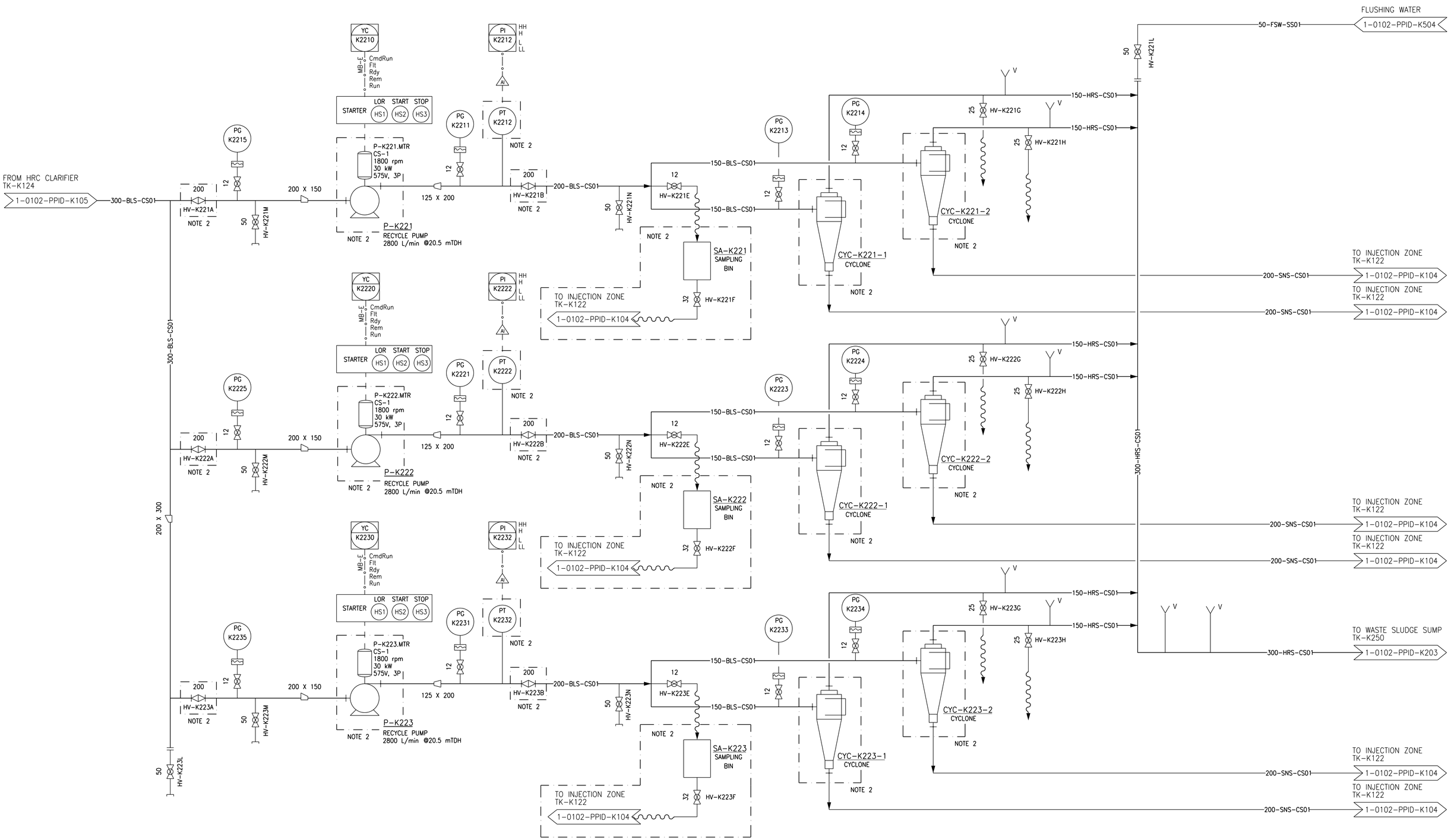

NOTES

1. CYCLONE UNDERFLOW PIPING AND A PORTION OF THE OVERFLOW PIPING ARE SUPPLIED BY THE CITY. REFER TO SUPPLY CONTRACTOR'S FIELD INSTALLATION DRAWINGS AND BILL OF MATERIALS.
2. CITY SUPPLIED EQUIPMENT.

APEGM
Certificate of Authorization
CH2M HILL Canada Ltd.
No. 1441

NO.	REVISIONS	DATE	DESIGN	CHECK
00	ISSUED FOR CONSTRUCTION - 976-2016	2017/04/05	J.C.	J.C.

CH2MHILL. SNC·LAVALIN KGS GROUP CONSULTING ENGINEERS

DESIGNED BY: J KRAEMER	CHECKED BY: F ABSI
DRAWN BY: J CORTEZ	APPROVED BY: H.T. FREIHAMMER
SCALE: NTS	ISSUED FOR CONSTRUCTION BY: J. SHUMKA
DATE: 2017/04/05	DATE: 2017/04/05
CONSULTANT NO.: 474248	

ENGINEER'S SEAL
PROVINCE OF MANITOBA
April 5, 2017
F. J. ABSI
Member 36875
REGISTERED PROFESSIONAL ENGINEER
F. J. Absi

Winnipeg
THE CITY OF WINNIPEG
WATER AND WASTE DEPARTMENT

SOUTH END WATER POLLUTION CONTROL CENTRE
SEWPCC UPGRADING/EXPANSION PROJECT
PROCESS AND INSTRUMENTATION DIAGRAM
HIGH RATE CLARIFICATION
RECYCLE PUMPS P-K221, P-K222 & P-K223

CITY DRAWING NUMBER	SHEET	REV.	SIZE
1-0102-PPID-K202	001	00	A1

PLOT DATE: 2017\03\31
FILE NAME: 1-0102-PPID-K202.dgn

A1 SIZE - 594mm x 841mm
©CH2M HILL 2017. ALL RIGHTS RESERVED.