A1 SIZE – 594mm x 841mm

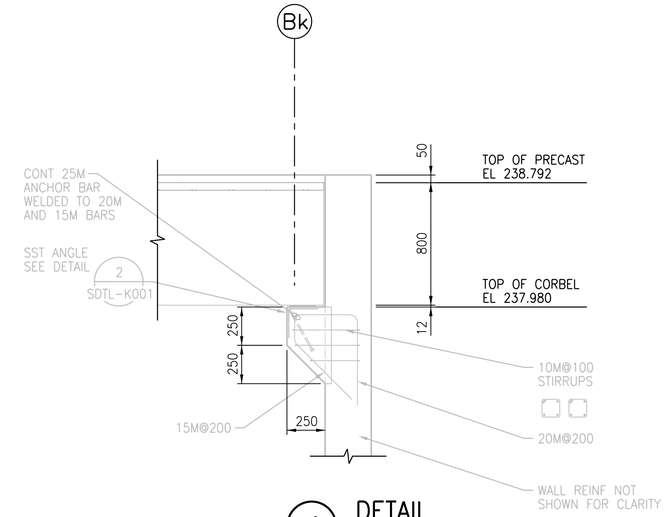

1 DETAIL 1:20

SGAD-K006, SGAD-K010, SGAD-K011

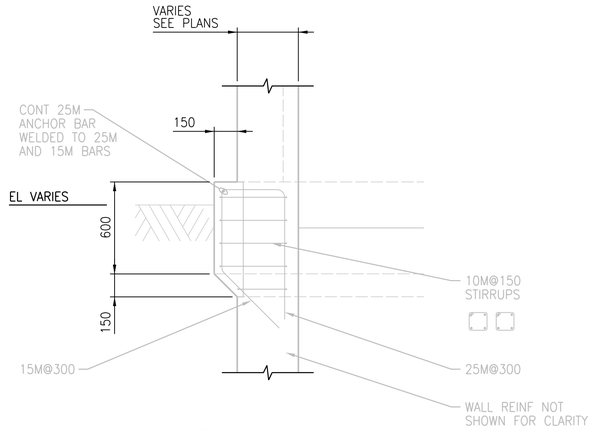

2 DETAIL 1:20

SGAD-K006, SGAD-K007, SGAD-K008, SGAD-K010, SGAD-K011, SGAD-K018, SGAD-K019, SGAD-K020

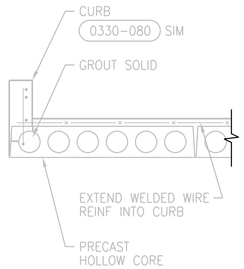

4 DETAIL 1:20

SGAD-K009, SGAD-K016

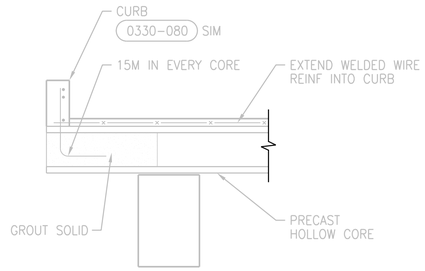

5 DETAIL 1:20

SGAD-K010

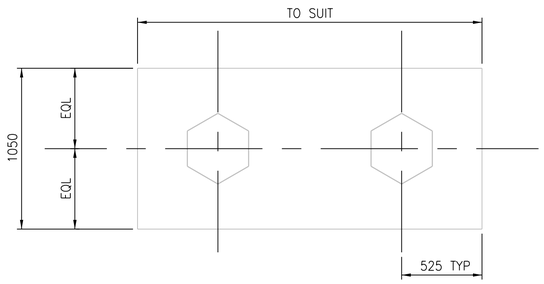

PLAN

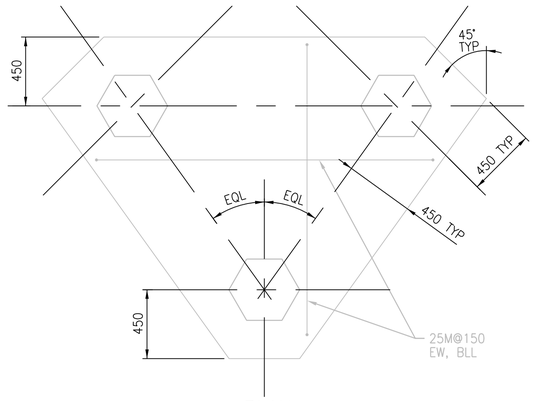

PLAN

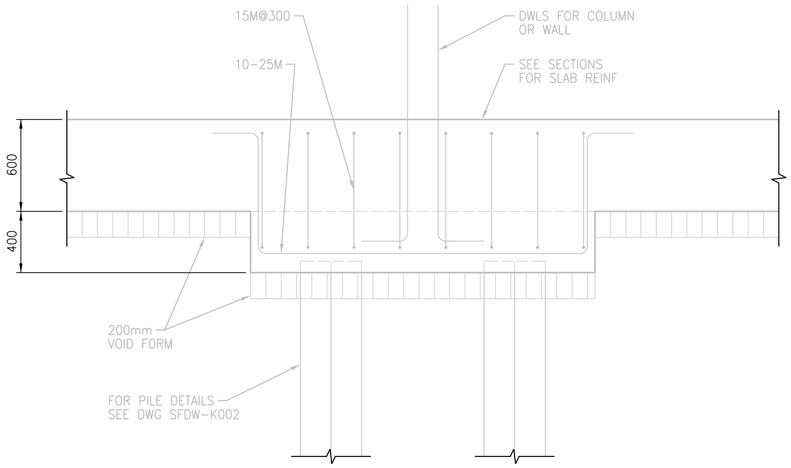

SECTION

3 PILE CAP DETAIL 1:20

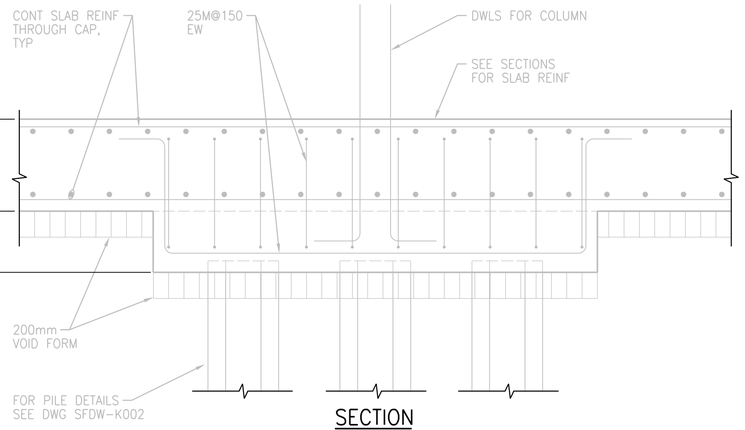

SECTION

6 PILE CAP DETAIL 1:20

APEGM
Certificate of Authorization
CH2M HILL Canada Ltd.
No. 1441

NO.	REVISIONS	DATE	DESIGN	CHECK
03	ISSUED FOR CONSTRUCTION – 976-2016	2017/04/05	G.O.	J.C.
02	ISSUED FOR CONSTRUCTION	10/2015	C.R.	J.C.
01	ISSUED FOR ADDENDUM NO. 3	09/2015	C.R.	J.C.
00	ISSUED FOR TENDER	08/2015	G.O.	J.C.

CH2MHILL. SNC·LAVALIN KGS GROUP CONSULTING ENGINEERS

DESIGNED BY: E. LUI
CHECKED BY: R. PARIKH
DRAWN BY: G. OMORI
APPROVED BY: H.T. FREIHAMMER
SCALE: 1:20
ISSUED FOR CONSTRUCTION BY: J. SHUMKA DATE: 2017/04/05
DATE: 2017/04/05
CONSULTANT NO.: 474248

ENGINEER'S SEAL
APR 5, 2017
PROVINCE OF MANITOBA
LUI
Member
37003
REGISTERED PROFESSIONAL ENGINEER

Winnipeg
THE CITY OF WINNIPEG
WATER AND WASTE DEPARTMENT

SOUTH END WATER POLLUTION CONTROL CENTRE
SEWPCC UPGRADING/EXPANSION PROJECT
STRUCTURAL
HIGH RATE CLARIFICATION BUILDING
DETAILS

CITY DRAWING NUMBER	SHEET	REV.	SIZE
1-0102-SDTL-K003		03	A1

PLOT DATE: 2017\04\02
FILE NAME:

©CH2M HILL 2017. ALL RIGHTS RESERVED.