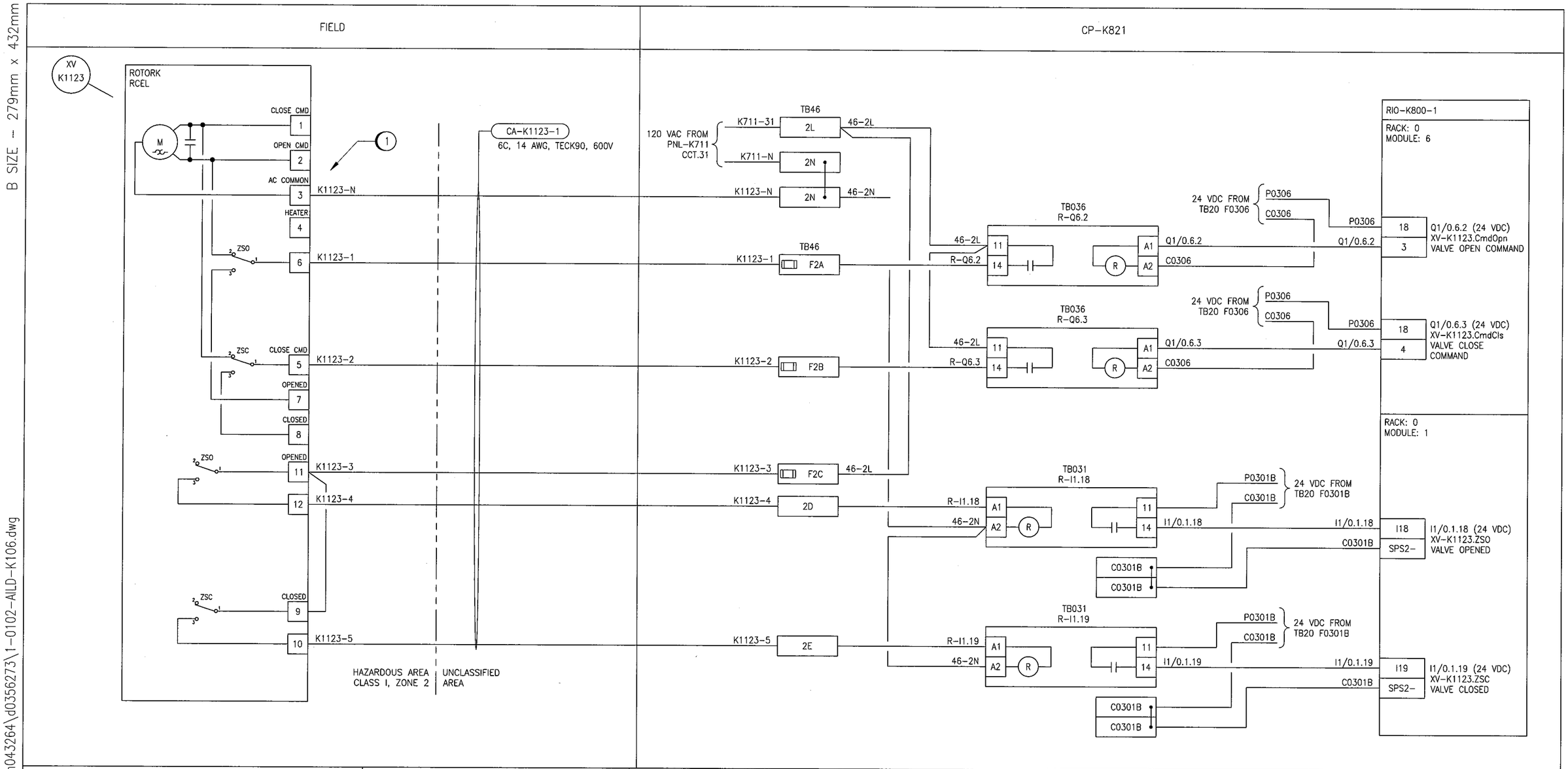

SPECIFIC NOTES:

1. PROVIDE HAZARDOUS RATED CABLE GLAND SEAL.

NO.	REVISIONS	DATE	DESIGN	CHECK
00	ISSUED FOR CONSTRUCTION - 976-2016	2017/04/05	SSB	TMC

APEGM Certificate of Authorization SNC-Lavalin Inc. No. 4489

SNC·LAVALIN CH2MHILL KGS GROUP CONSULTING ENGINEERS

DESIGNED BY: S. BOGHOSIAN	CHECKED BY: T. CHURCH
DRAWN BY: S. BOGHOSIAN	APPROVED BY: E. RYCZKOWSKI
SCALE: NTS	DATE: 2015/02/13
ISSUED FOR CONSTRUCTION BY: J. SHUMKA	DATE: 2017/04/05
CONSULTANT NO.: 474248	

ENGINEER'S SEAL

PROVINCE OF MANITOBA T.M. CHURCH Member 32682 REGISTERED PROFESSIONAL ENGINEER

Apr. 5, 2017

Winnipeg

THE CITY OF WINNIPEG
WATER AND WASTE DEPARTMENT

SOUTH END WATER POLLUTION CONTROL CENTRE
SEWPCC UPGRADING/EXPANSION PROJECT
AUTOMATION - LOOP DIAGRAM
XV-K1123
POLYMER VALVE FOR TK-K112

CITY DRAWING NUMBER	SHEET	REV.	SIZE
1-0102-AILD-K106	001	00	B

B SIZE - 279mm x 432mm

LAST SAVE: 2017/04/01 - 10:41am
PATH: C:\pw_workdir\ch2mhill_wbg\sh043264\d0356273\1-0102-AILD-K106.dwg

PLOT DATE: Apr 01, 2017 - 10:41am

FILE NAME: 1-0102-AILD-K106.dwg