A1 SIZE – 594mm x 841mm

SCHEMATIC

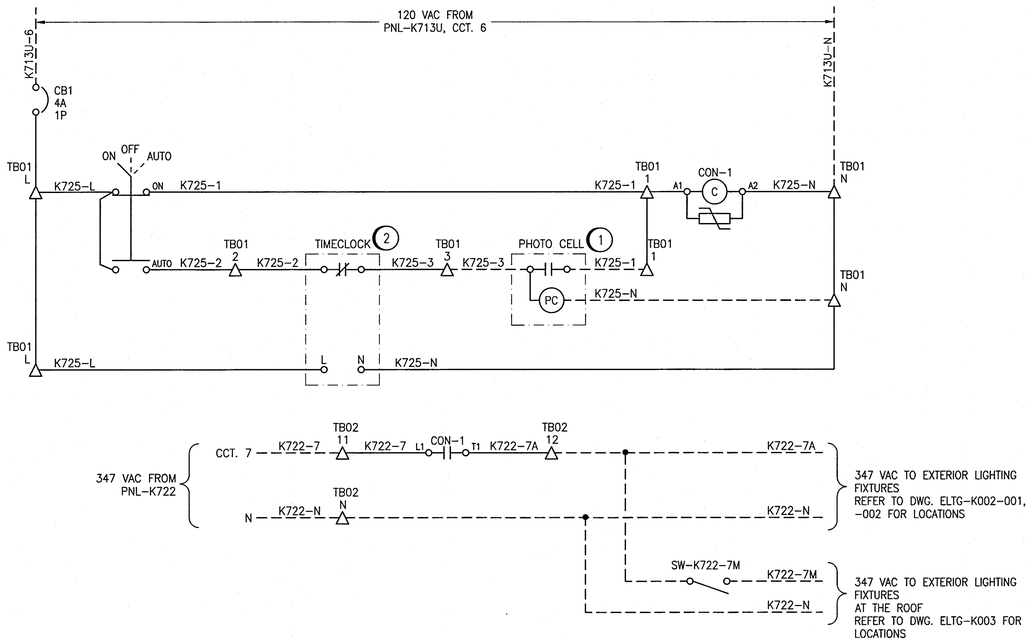

FIELD WIRING DIAGRAM

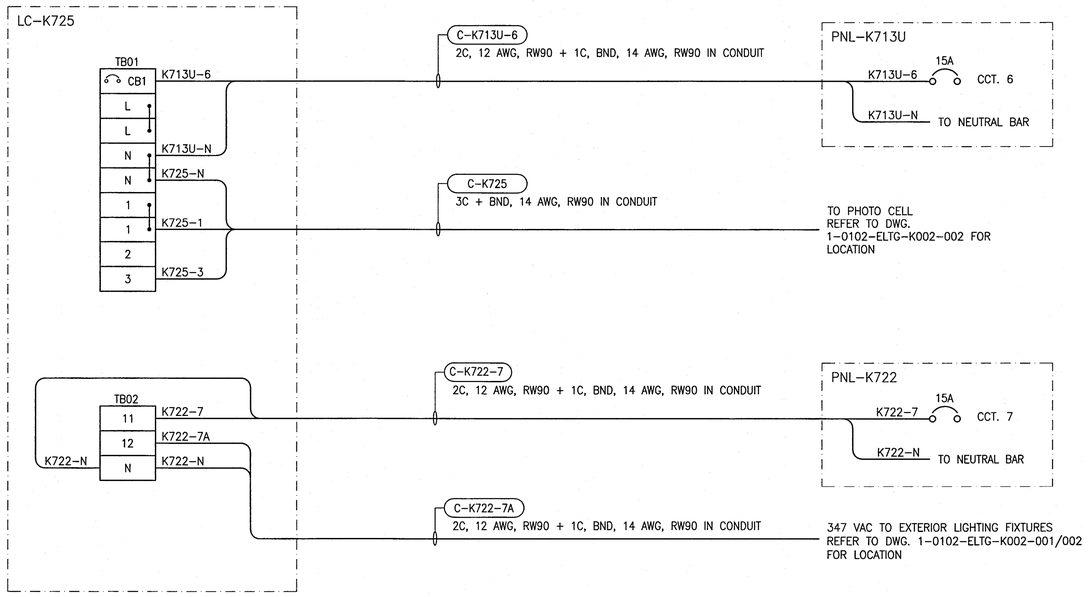

LEGEND:

- △ TERMINAL IN LIGHTING CONTROL LC-K725
- METAL OXIDE VARISTOR (MOV)
- (PC) PHOTO CELL
- (C) LIGHTING CONTACTOR COIL

SPECIFIC NOTES:

1. PHOTOCELL TO BE MOUNTED AS PER MANUFACTURER RECOMMENDATIONS. PHOTOCELL TO BE EQUAL TO PRECISION SERIES ST-15 C/W SUNSHIELD. REFER TO DWG. 1-0102-ELTG-K002-001 FOR LOCATION.
2. TIMECLOCK TO BE 7 DAY PER WEEK, ELECTRONIC, ADJUSTABLE TO EACH HOUR, TIMECLOCK TO ALLOW FOR PHOTOCELL ON, TIMECLOCK OVER-RIDE OFF LIGHTING CONTROL FUNCTION. TIMECLOCK TO BE TORK DG100A SERIES.

REFERENCE DRAWINGS	DESCRIPTION
1-0102-ECBD-K005	EXTERIOR LIGHTING CONTROL, LC-K725 CABINET LAYOUT
1-0102-ESCH-K001	PANEL SCHEDULES & DETAILS

APEGM Certificate of Authorization
SNC-Lavalin Inc.
No. 4489

NO.	REVISIONS	DATE	DESIGN	CHECK
00	ISSUED FOR CONSTRUCTION – 976-2016	2017/04/05	SLJ	DEB

CH2MHILL. SNC·LAVALIN KGS GROUP

DESIGNED BY: S. JUGANAS	CHECKED BY: E. RYCZKOWSKI
DRAWN BY: MJ. PERSSON	APPROVED BY: D. BECKER
SCALE: NTS	ISSUED FOR CONSTRUCTION BY: J. SHUMKA
DATE: 2015/02/23	DATE: 2017/04/05
CONSULTANT NO.: 474248	

ENGINEER'S SEAL
PROVINCE OF MANITOBA
D.E. BECKER
Member
23646
REGISTERED PROFESSIONAL ENGINEER
April 5/2017

Winnipeg
THE CITY OF WINNIPEG
WATER AND WASTE DEPARTMENT

SOUTH END WATER POLLUTION CONTROL CENTRE
SEWPCC UPGRADING/EXPANSION PROJECT
ELECTRICAL – EXTERIOR LIGHTING CONTROL
HIGH RATE CLARIFICATION BUILDING
LC-K725 SCHEMATIC AND WIRING DIAGRAM

CITY DRAWING NUMBER	SHEET	REV.	SIZE
1-0102-ELTG-K005	001	00	A1

LAST SAVE: 2017/03/24 – 9:42am
PATH: C:\DWG\1-0102-ELTG-K005.dwg
PLOT DATE: Mar 24, 2017 – 9:42am
FILE NAME: 1-0102-ELTG-K005.dwg