A1 SIZE – 594mm x 841mm

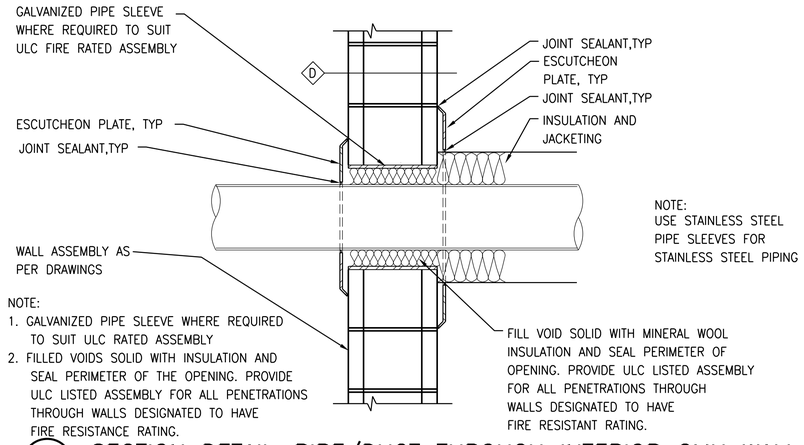

1 SECTION DETAIL–PIPE/DUCT THROUGH INTERIOR CMU WALL
1:10

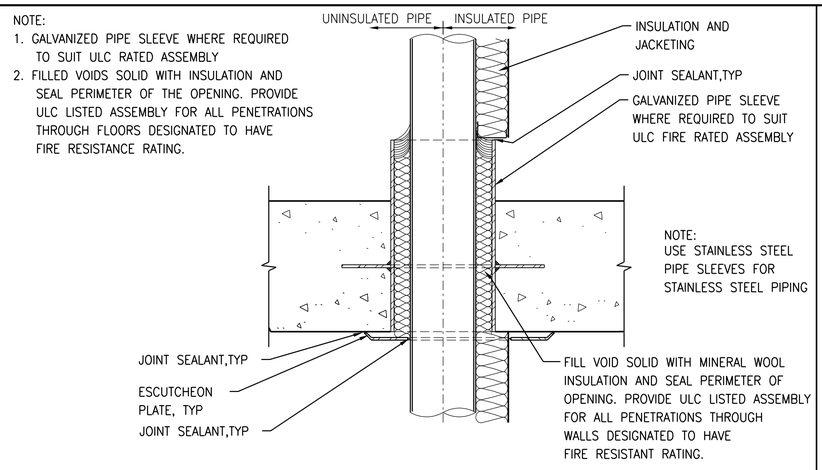

2 SECTION DETAIL–PIPE/DUCT THROUGH FLOOR
1:10

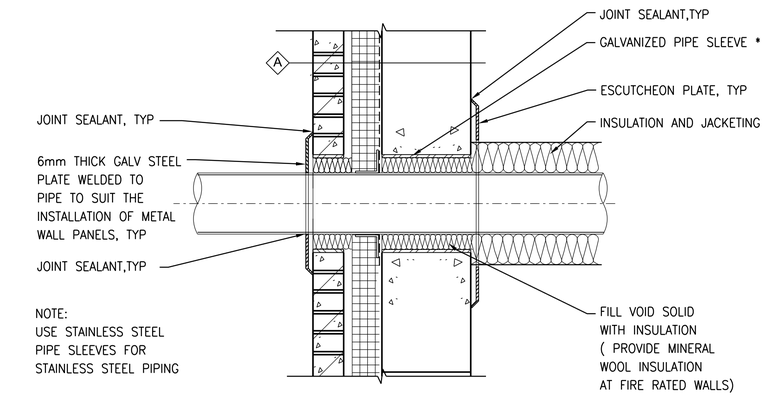

3 SECTION DETAIL– PIPE/DUCT THROUGH EXTERIOR WALL
1:10

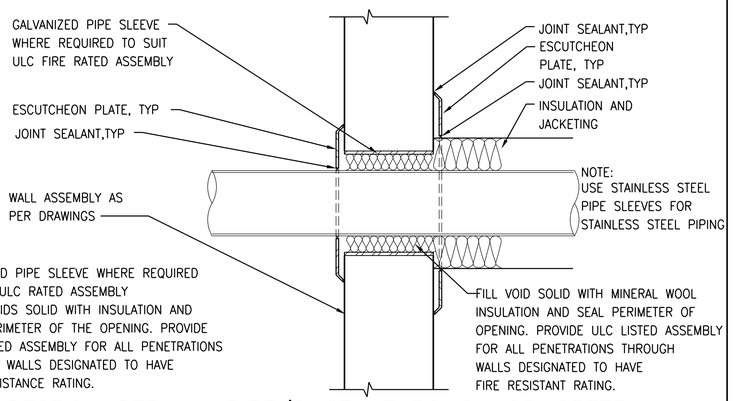

4 SECTION DETAIL– PIPE/DUCT THROUGH CONCRETE WALL
1 : 10

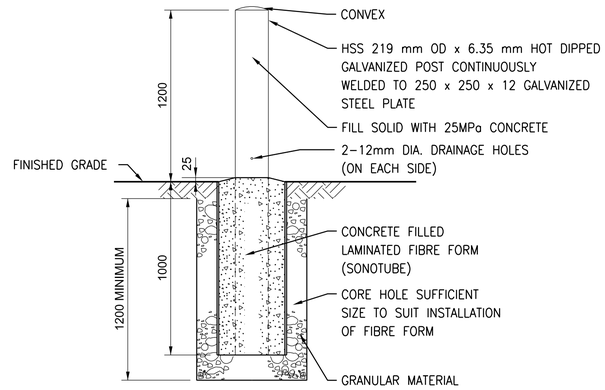

5 SECTION DETAIL– BOLLARD
NTS

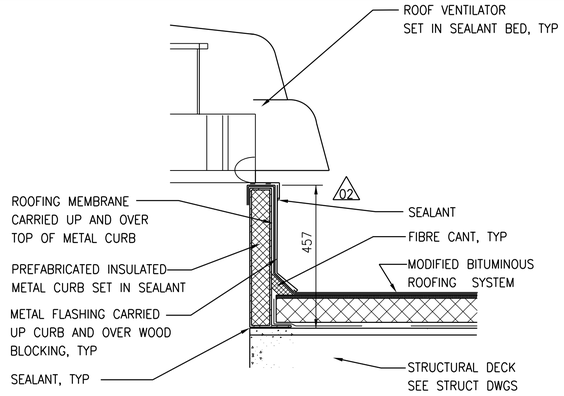

6 SECTION DETAIL– ROOF MOUNTED VENTILATOR
1:10

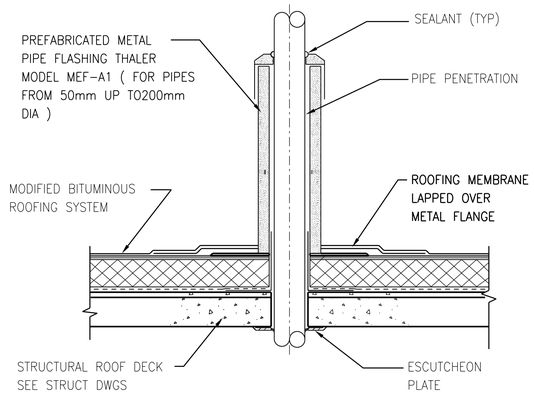

7 SECTION DETAIL– PIPE PENETRATION THROUGH ROOF (PIPE/CONDUIT SMALLER THAN 200mm)
1: 10

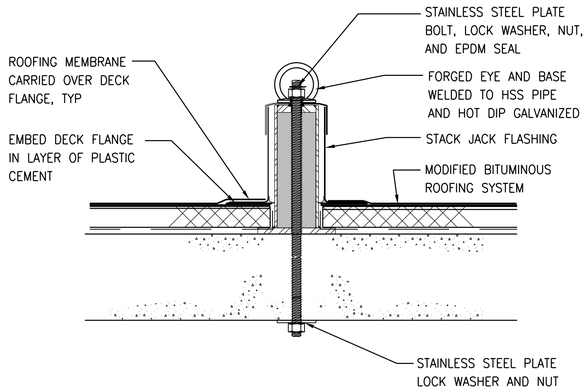

8 SECTION DETAIL– ROOF FALL ARREST ANCHOR
NTS

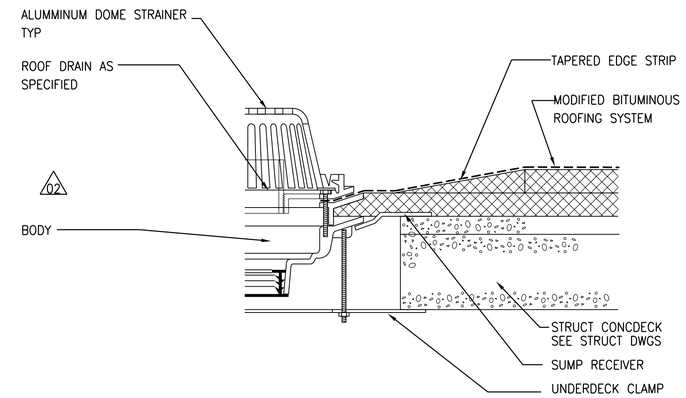

9 SECTION DETAIL– ROOF DRAIN
1:5

©CH2M HILL 2017. ALL RIGHTS RESERVED.

APEGM
Certificate of Authorization
CH2M HILL Canada Ltd.
No. 1441

NO.	REVISIONS	DATE	DESIGN	CHECK
03	ISSUED FOR CONSTRUCTION – 976–2016	2017/04/05	R.B.	J.C.
02	ISSUED FOR 90% PRELIMINARY REVIEW	09/2016	R.B.	J.C.
01	ISSUED FOR CONSTRUCTION	10/2015	N.B.	J.C.
00	ISSUED FOR TENDER	08/2015	N.B.	J.C.

CH2MHILL CANADA Architects Inc.
SNC·LAVALIN KGS GROUP

DESIGNED BY: R. ZAKKO	CHECKED BY: B. KOLIS–HUPA
DRAWN BY: N. BOYCHUK	APPROVED BY: H.T. FREIHAMMER
SCALE: AS SHOWN	ISSUED FOR CONSTRUCTION BY: J. SHUMKA
DATE: 2017/04/05	DATE: 2017/04/05
CONSULTANT NO.: 474248	

ENGINEER'S SEAL
PROVINCE OF MANITOBA
REID ZAKKO
04-05-2017
REGISTERED ARCHITECT

Winnipeg
THE CITY OF WINNIPEG
WATER AND WASTE DEPARTMENT

SOUTH END WATER POLLUTION CONTROL CENTRE
SEWPCC UPGRADING/EXPANSION PROJECT
BUILDING

STANDARD DETAILS (1)

CITY DRAWING NUMBER	SHEET	REV.	SIZE
1–0102–BDTL–A003		03	A1

PLOT DATE: 2017\03\29
FILE NAME: