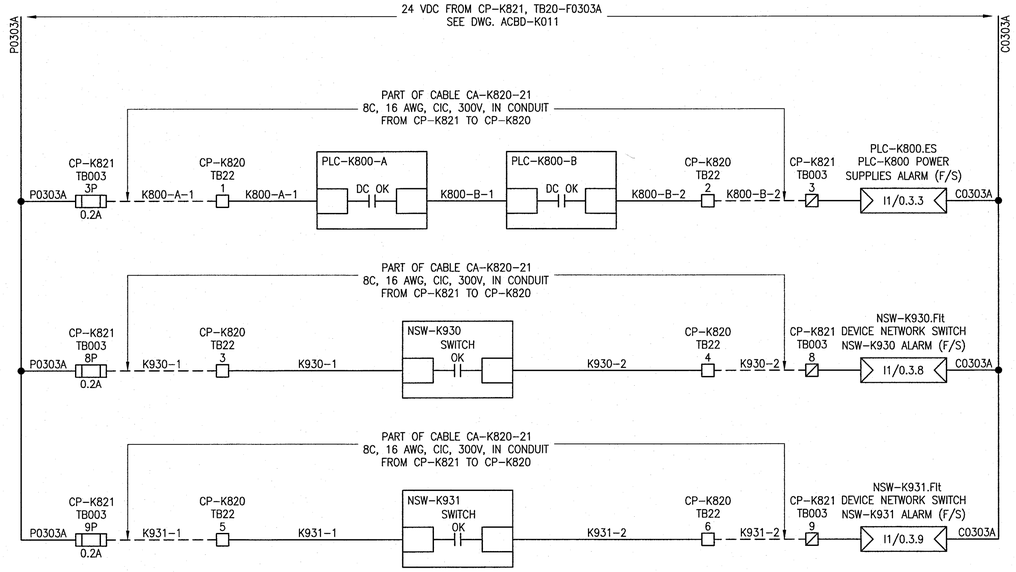

TERMINAL LAYOUT TB22

1
2
3
4
5
6

LEGEND:

☐ CP-K820 TERMINAL

☑ CP-K821 TERMINAL

REFERENCE DRAWINGS	DESCRIPTION
--	--

APEGM Certificate of Authorization
SNC-Lavalin Inc.
No. 4489

NO.	REVISIONS	DATE	DESIGN	CHECK
00	ISSUED FOR CONSTRUCTION - 976-2016	2017/04/05	MW	PC

CH2MHILL. SNC·LAVALIN KGS GROUP

DESIGNED BY: M. WANG	CHECKED BY: P. CHICATUN
DRAWN BY: M. WANG	APPROVED BY: E. RYCZKOWSKI
SCALE: NTS	ISSUED FOR CONSTRUCTION BY: J. SHUMKA
DATE: 2015/02/05	DATE: 2017/04/05
CONSULTANT NO.: 474248	

ENGINEER'S SEAL
PROVINCE OF MANITOBA
P. CHICATUN
Member 30307
REGISTERED PROFESSIONAL ENGINEER
APR. 4, 2017
REV. 00

Winnipeg
THE CITY OF WINNIPEG
WATER AND WASTE DEPARTMENT

SOUTH END WATER POLLUTION CONTROL CENTRE
SEWPCC UPGRADING/EXPANSION PROJECT
AUTOMATION - WIRING DIAGRAM
HIGH RATE CLARIFICATION BUILDING
CP-K820 MISCELLANEOUS WIRING

CITY DRAWING NUMBER	SHEET	REV.	SIZE
1-0102-ACBD-K005	001	00	A1

PLOT DATE: Apr 01, 2017 - 10:23am
FILE NAME: 1-0102-ACBD-K005.dwg

A1 SIZE - 594mm x 841mm

LAST SAVE: 2017/04/01 - 10:23am
PATH: C:\pw_workdir\ch2mhill_wbg\sh043264\d0356273\1-0102-ACBD-K005.dwg