A1 SIZE – 594mm x 841mm

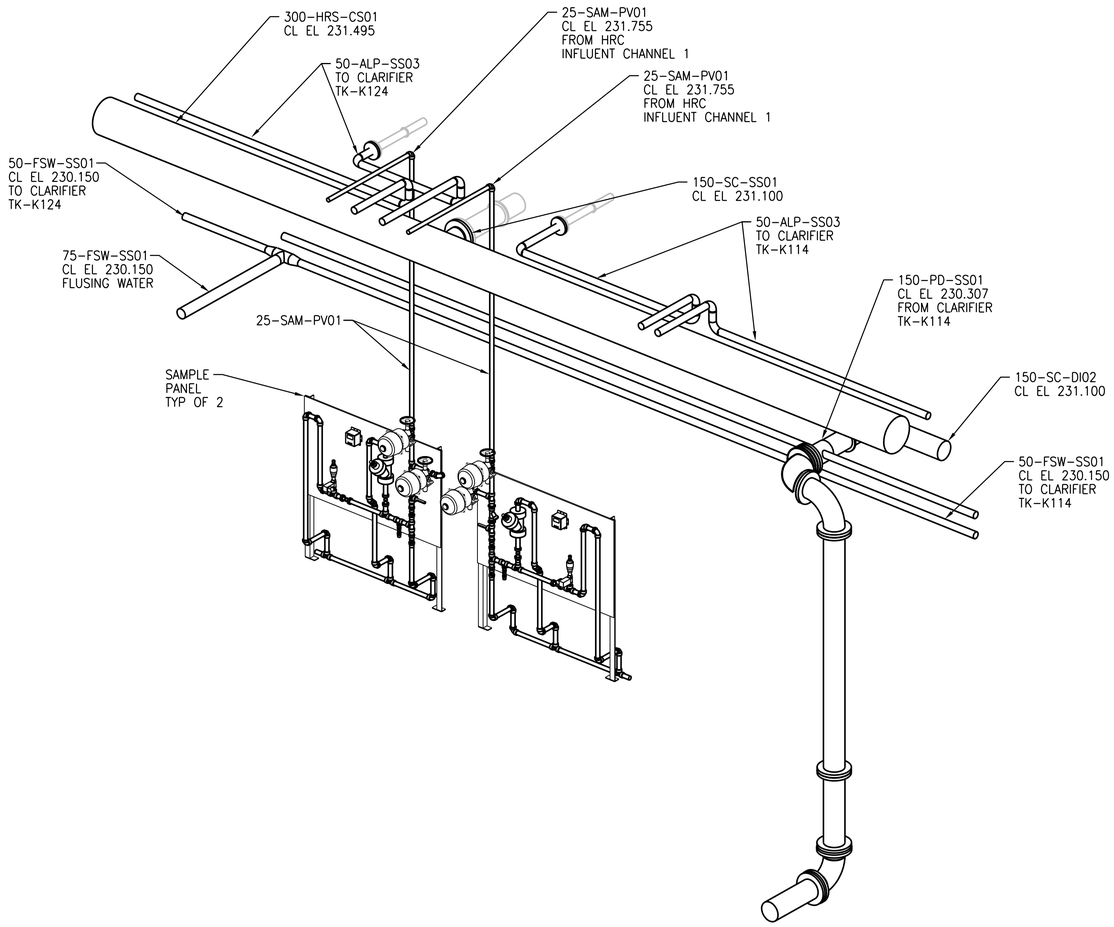

1 ISOMETRIC
NTS
PGAD-K001
PGAD-K005
PGAD-K009

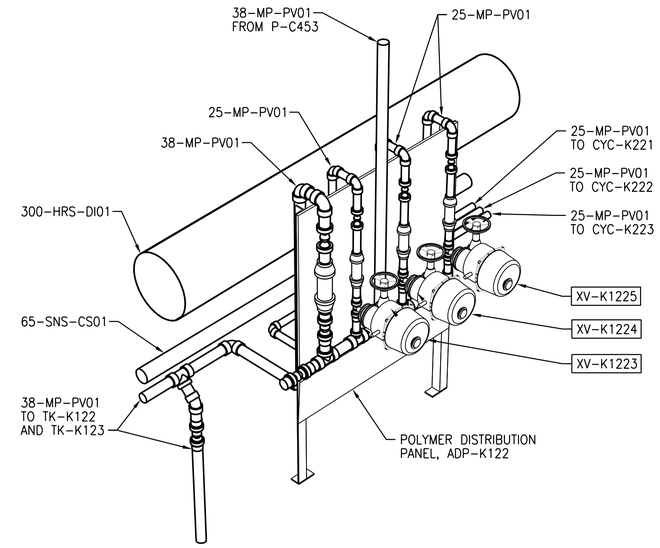

2 ISOMETRIC
NTS
PGAD-K001
PGAD-K005
PGAD-K009

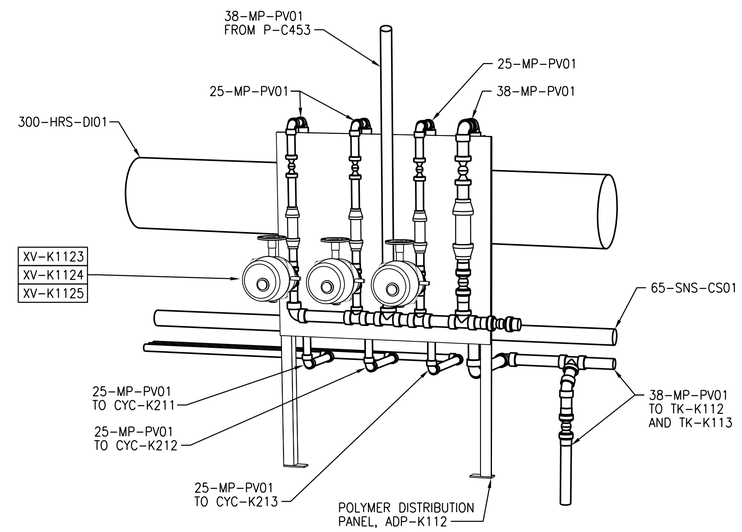

3 ISOMETRIC
NTS
PGAD-K001
PGAD-K005
PGAD-K009

©CH2M HILL 2017. ALL RIGHTS RESERVED.

APEGM
Certificate of Authorization
CH2M HILL Canada Ltd.
No. 1441

NO.	REVISIONS	DATE	DESIGN	CHECK
00	ISSUED FOR CONSTRUCTION – 976-2016	2017/04/05	B.C.	J.C.

CH2MHILL. SNC·LAVALIN KGS GROUP

DESIGNED BY: J. KRAEMER	CHECKED BY: F. ABSI
DRAWN BY: B. COOPER	APPROVED BY: H. T. FREIHAMMER
SCALE: NTS	ISSUED FOR CONSTRUCTION BY: J. SHUMKA
DATE: 2017/04/05	DATE: 2017/04/05
CONSULTANT NO.: 474248	

ENGINEER'S SEAL

Winnipeg
THE CITY OF WINNIPEG
WATER AND WASTE DEPARTMENT

SOUTH END WATER POLLUTION CONTROL CENTRE
SEWPCC UPGRADING/EXPANSION PROJECT
PROCESS
HIGH RATE CLARIFICATION BUILDING
DETAILS – ISO

CITY DRAWING NUMBER	SHEET	REV.	SIZE
1-0102-PISO-K001	001	00	A1

PLOT DATE: 2017\03\31
FILE NAME: 1-0102-PISO-K001.dgn