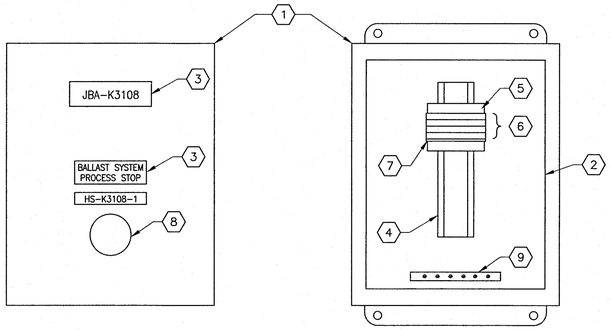

EXTERIOR PANEL VIEW
1 : 3

INTERIOR PANEL VIEW
1 : 3

JBA–K3108

BILL OF MATERIAL

ITEM	QTY	DESCRIPTION	MANUFACTURER	CATALOG NUMBER
1	AS REQ'D	NEMA 4 ENCL. WALL MOUNT – 254x203x152mm	HOFFMAN	A10086CHNF
2	1	PANEL FOR ITEM 1	HOFFMAN	A10P8
3	AS REQ'D	LAMACOIDS	–	
4	AS REQ'D	35mm DIN RAIL	PHOENIX CONTACT	0801733
5	AS REQ'D	TERMINAL END CLAMP – CLIPFIX 35	PHOENIX CONTACT	3022218
6	4	FEED THROUGH TERMINAL – UT 4–MTD	PHOENIX CONTACT	3046184
7	AS REQ'D	TERMINAL END PLATE – D–UT 2, 5/4 TWIN	PHOENIX CONTACT	3047141
8	1	PUSHBUTTON 30mm MAINTAINED PUSH–PULL TYPE, MUSHROOM HEAD 41mm, BLACK	SCHNEIDER	9001KR9BH13
9	1	GROUND BAR, 6 TAPS,	ILSCO	0167–6

GENERAL NOTES:

1. ALL POWER WIRING TO BE TEW/MTW 600V, 105°C INSULATION, STRANDED COPPER, 12 AWG OR LARGER WHERE CURRENT REQUIREMENTS DICTATE AS PER CEC REQUIREMENTS.
2. EXTERNAL COMPONENTS ARE TO BE LABELED AS SHOWN ON THE DRAWINGS.
3. TEST ALL WIRING AND COMPONENTS FOR FUNCTIONAL OPERATION, CORRECT CONNECTION, CONTINUITY AND INSULATION INTEGRITY. DOCUMENT ALL TEST RESULTS.
4. ALL MAJOR COMPONENTS INSIDE THE PANEL ARE TO BE LABELED WITH LAMACOIDS IN ACCORDANCE WITH MAJOR DESCRIPTIONS ON THE DRAWINGS.
5. PROVIDE WIRE BARREL FERRULES FOR ALL WIRING.
6. ALL TERMINAL BLOCKS SHALL BE NUMBERED AS SHOWN IN THE DRAWINGS, COMPLETE WITH GROUP LABELING.
7. ALL WIRES SHALL BE MARKED AS INDICATED ON THE DRAWINGS.
8. JUMPER BARS SHALL BE USED INSTEAD OF WIRE JUMPERS WHERE POSSIBLE.
9. SEE AILD–K303 FOR INTERNAL WIRING DETAILS.

REFERENCE DRAWINGS	DESCRIPTION
1–0102–AILD–K303	LOOP DIAGRAM, BALLAST ADDITION SYSTEM STOP SWITCHES

1:3 30 0 60 120

APEGM Certificate of Authorization
SNC-Lavalin Inc.
No. 4489

NO.	REVISIONS	DATE	DESIGN	CHECK
00	ISSUED FOR CONSTRUCTION – 976–2016	2017/04/05	SSB	TMC

CH2MHILL. KGS GROUP SNC·LAVALIN

DESIGNED BY: S. BOGHOSIAN	CHECKED BY: T. CHURCH
DRAWN BY: S. BOGHOSIAN	APPROVED BY: E. RYCZKOWSKI
SCALE: 1:3	ISSUED FOR CONSTRUCTION BY: J. SHUMKA
DATE: 2015/11/26	DATE: 2017/04/05
CONSULTANT NO.: 474248	

ENGINEER'S SEAL
PROVINCE OF MANITOBA
T.M. CHURCH
Member 32682
REGISTERED PROFESSIONAL ENGINEER
Apr. 5, 2017

Winnipeg
THE CITY OF WINNIPEG
WATER AND WASTE DEPARTMENT

SOUTH END WATER POLLUTION CONTROL CENTRE
SEWPCC UPGRADING/EXPANSION PROJECT
AUTOMATION – CABINET LAYOUT
HIGH RATE CLARIFICATION BUILDING
JUNCTION BOXES

CITY DRAWING NUMBER	SHEET	REV.	SIZE
1–0102–ACBD–K051	002	00	A1

PLOT DATE: Apr 01, 2017 – 2:15pm
FILE NAME:1–0102–ACBD–K051–002.dwg

A1 SIZE – 594mm x 841mm
LAST SAVE: 2017/04/01 – 2:15pm
PATH: C:\pw_workdir\ch2mhill_wbg\sh043264\d0356391\1–0102–ACBD–K051–002.dwg