A1 SIZE – 594mm x 841mm

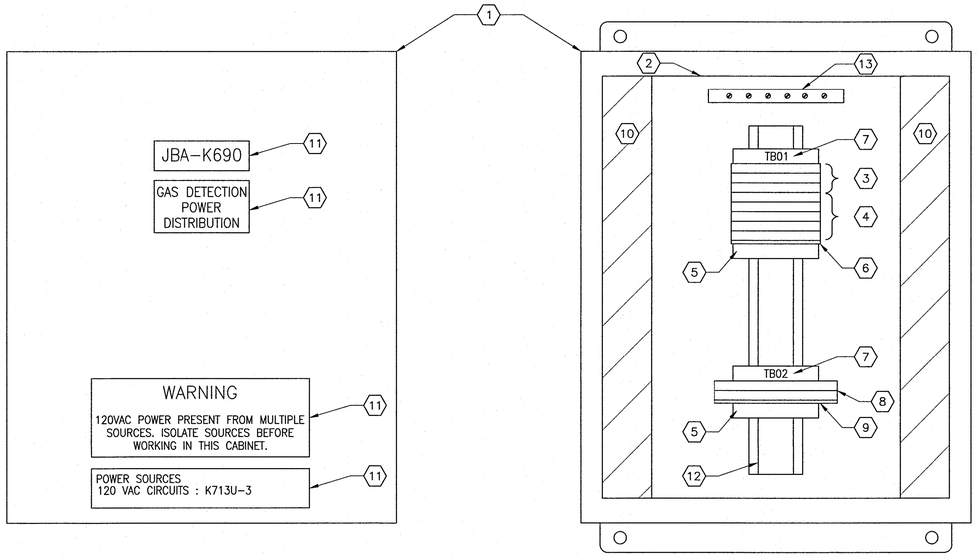

EXTERIOR PANEL VIEW
1 : 2

INTERIOR PANEL VIEW
1 : 2

JBA–K690

BILL OF MATERIAL				
ITEM	QTY	DESCRIPTION	MANUFACTURER	CATALOG NUMBER
1	1	NEMA 12 ENCL. WALL MOUNT – 305X254X127mm	HOFFMAN	A1210CH
2	1	PANEL FOR ITEM 1	HOFFMAN	A12P10
3	3	FUSED TERMINAL – UT 4 WITH FUSE PLUG–P–FU 5X20	PHOENIX CONTACT	3046142 3036806
4	5	FEED THROUGH TERMINAL – UT 4–MTD	PHOENIX CONTACT	3046184
5	AS REQ'D	TERMINAL END CLAMP – CLIPFIX 35	PHOENIX CONTACT	3022218
6	AS REQ'D	TERMINAL END PLATE – D–UT 2,5/4 TWIN	PHOENIX CONTACT	3047141
7	AS REQ'D	TERMINAL BLOCK MARKER – KLM–A	PHOENIX CONTACT	1004348
8	2	RELAY MODULE, 24 VDC, 1PDT, STANDARD, DIODE PROTECTION	PHOENIX CONTACT	2966171
9	AS REQ'D	RELAY MODULE SEPARATING PLATE	PHOENIX CONTACT	2966841
10	AS REQ'D	NARROW SLOT WIRING DUCT AND COVER, 1.26"x2.12"	PANDUIT	F1X2LG6
11	AS REQ'D	LAMACOIDS	–	–
12	AS REQ'D	35mm DIN RAIL	PHOENIX CONTACT	0801733
13	1	GROUND BAR, 6 TAPS,	ILSCO	0167–6

WIRING DIAGRAM:

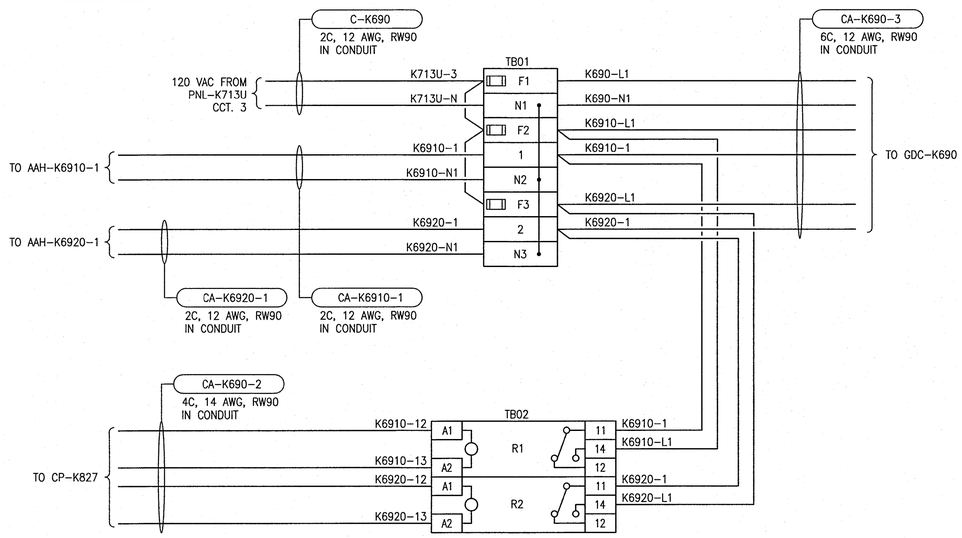

FUSE SCHEDULE	
ID	TYPE
F1	5A TIME DELAY
F2	5A TIME DELAY
F3	5A TIME DELAY

GENERAL NOTES:

1. ALL POWER WIRING TO BE TEW/MTW 600V, 105°C INSULATION, STRANDED COPPER, 12 AWG OR LARGER WHERE CURRENT REQUIREMENTS DICTATE AS PER CEC REQUIREMENTS.
2. EXTERNAL COMPONENTS ARE TO BE LABELED AS SHOWN ON THE DRAWINGS.
3. TEST ALL WIRING AND COMPONENTS FOR FUNCTIONAL OPERATION, CORRECT CONNECTION, CONTINUITY AND INSULATION INTEGRITY. DOCUMENT ALL TEST RESULTS.
4. ALL MAJOR COMPONENTS INSIDE THE PANEL ARE TO BE LABELED WITH LAMACOIDS IN ACCORDANCE WITH MAJOR DESCRIPTIONS ON THE DRAWINGS.
5. PROVIDE WIRE BARREL FERRULES FOR ALL WIRING.
6. ALL TERMINAL BLOCKS SHALL BE NUMBERED AS SHOWN IN THE DRAWINGS, COMPLETE WITH GROUP LABELING.
7. ALL WIRES SHALL BE MARKED AS INDICATED ON THE DRAWINGS.
8. JUMPER BARS SHALL BE USED INSTEAD OF WIRE JUMPERS WHERE POSSIBLE.

REFERENCE DRAWINGS	DESCRIPTION
1–0102–AILD–K633	LOOP DIAGRAM, CLARIFIER ROOM & PUMP ROOM GAS DETECTION
1–0102–AILD–K632	LOOP DIAGRAM, GAS DETECTION CONTROLLER, GDC–K690

1:2 20 0 40 80

APEGM Certificate of Authorization
SNC-Lavalin Inc.
No. 4489

NO.	REVISIONS	DATE	DESIGN	CHECK
00	ISSUED FOR CONSTRUCTION – 976–2016	2017/04/05	SSB	TMC

CH2MHILL. SNC·LAVALIN KGS GROUP

DESIGNED BY: S. BOGHOSIAN	CHECKED BY: T. CHURCH
DRAWN BY: S. BOGHOSIAN	APPROVED BY: E. RYCZKOWSKI
SCALE: 1:2	ISSUED FOR CONSTRUCTION BY: J. SHUMKA
DATE: 2015/03/24	DATE: 2017/04/05
CONSULTANT NO.: 474248	

ENGINEER'S SEAL
PROVINCE OF MANITOBA
T. M. CHURCH
Member 32682
REGISTERED PROFESSIONAL ENGINEER
Apr. 3, 2017

Winnipeg THE CITY OF WINNIPEG
WATER AND WASTE DEPARTMENT

SOUTH END WATER POLLUTION CONTROL CENTRE
SEWPCC UPGRADING/EXPANSION PROJECT
AUTOMATION – CABINET LAYOUT
HIGH RATE CLARIFICATION BUILDING
JBA–K690 JUNCTION BOX

CITY DRAWING NUMBER	SHEET	REV.	SIZE
1–0102–ACBD–K052	001	00	A1

LAST SAVE: 2017/04/01 – 2:15pm
PATH: C:\pw_workdir\ch2mhill_wbg\sh043264\d0356391\1–0102–ACBD–K052.dwg

PLOT DATE: Apr 01, 2017 – 2:15pm

FILE NAME: 1–0102–ACBD–K052.dwg