A1 SIZE – 594mm x 841mm

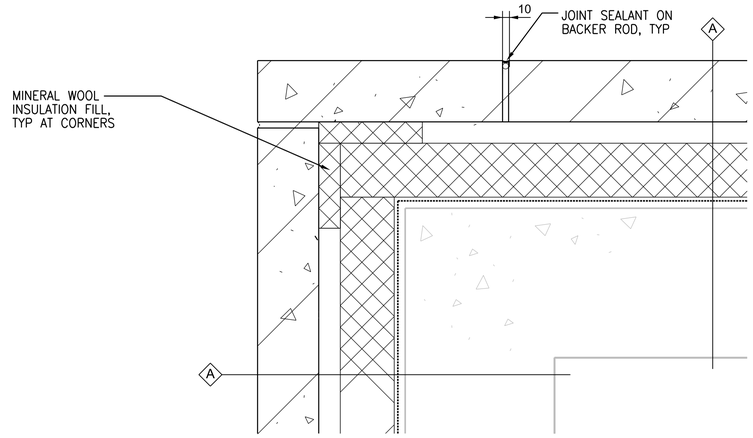

1 TYPICAL VENEER WALL PLAN DETAIL AT CORNER
1:5
BGAD–K002

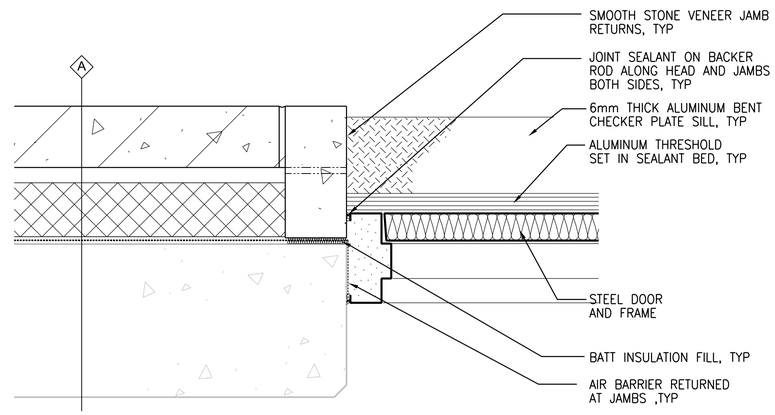

2 TYPICAL PLAN DETAIL AT DOOR JAMB
1:5
BGAD–K002

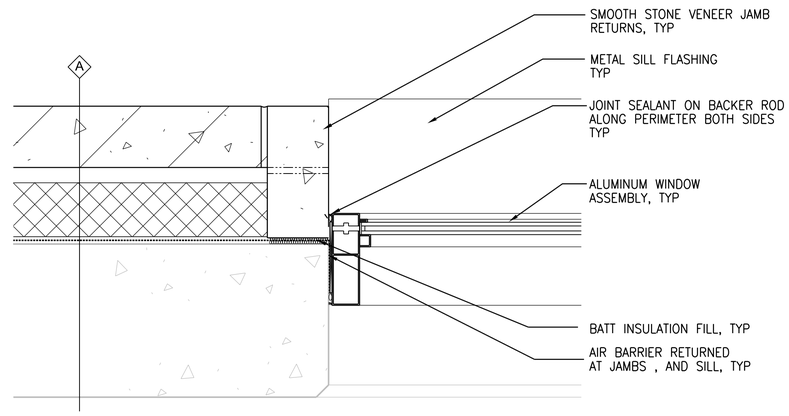

3 TYPICAL PLAN DETAIL AT WINDOW JAMB
1:5
BGAD–K002

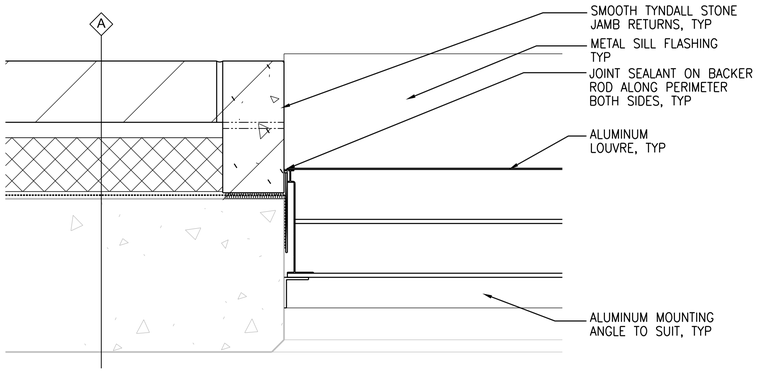

4 TYPICAL PLAN DETAIL AT LOUVER JAMB
1:5
BGAD–K002

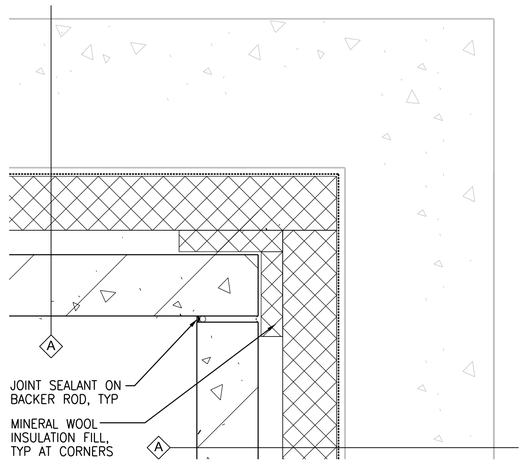

6 TYPICAL VENEER WALL PLAN DETAIL AT CORNER
1:5
BGAD–K002

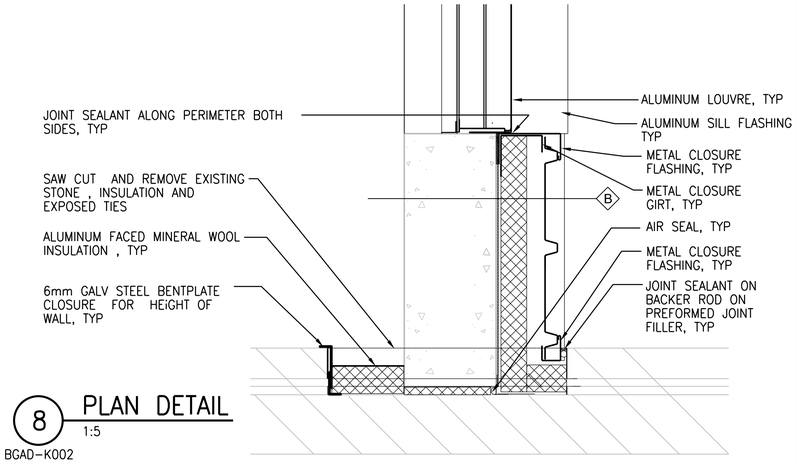

8 PLAN DETAIL
1:5
BGAD–K002

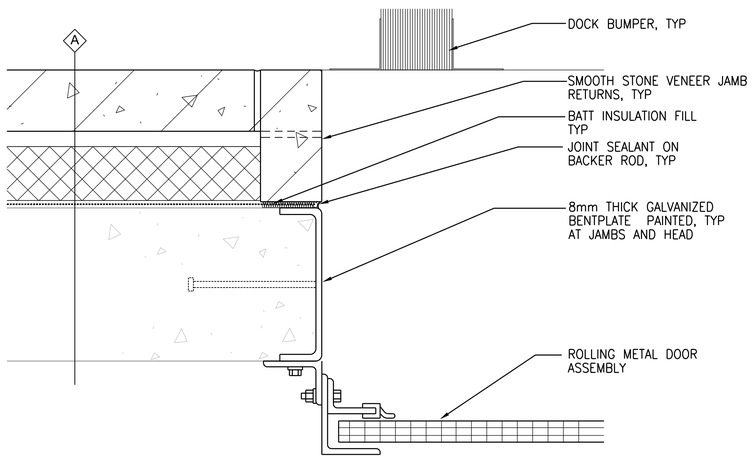

5 TYPICAL PLAN DETAIL AT ROLLING DOOR JAMB
1:5
BGAD–K002

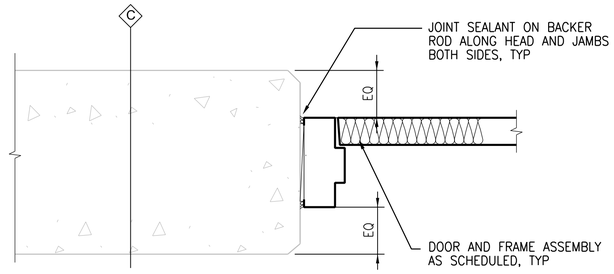

7 PLAN DETAIL
1:5
BGAD–K002

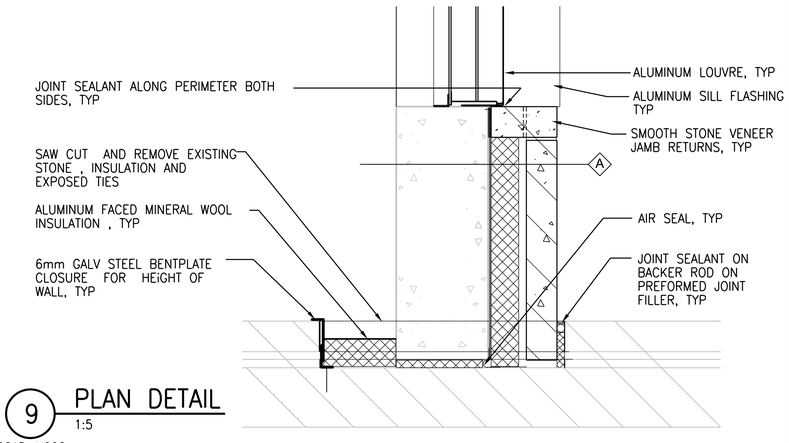

9 PLAN DETAIL
1:5
BGAD–K002

APEGM
Certificate of Authorization
CH2M HILL Canada Ltd.
No. 1441

NO.	REVISIONS	DATE	DESIGN	CHECK
00	ISSUED FOR CONSTRUCTION – 976-2016	2017/04/05	R.B.	J.C.

CH2MHILL CANADA Architects Inc.
SNC·LAVALIN KGS GROUP

DESIGNED BY: R. ZAKKO	CHECKED BY: B. KOLIS-HUPA
DRAWN BY: R. BATHAN	APPROVED BY: H.T. FRIEHAMMER
SCALE: AS SHOWN	ISSUED FOR CONSTRUCTION BY: J. SHUMKA
DATE: 2017/04/05	DATE: 2017/04/05
CONSULTANT NO.: 474248	

ENGINEER'S SEAL
PROVINCE OF MANITOBA
REID ZAKKO
24-05-2017
REGISTERED ARCHITECT

Winnipeg
THE CITY OF WINNIPEG
WATER AND WASTE DEPARTMENT

SOUTH END WATER POLLUTION CONTROL CENTRE
SEWPCC UPGRADING/EXPANSION PROJECT
BUILDING
HIGH RATE CLARIFICATION BUILDING
PLAN DETAILS – PART 1

CITY DRAWING NUMBER	SHEET	REV.	SIZE
1-0102-BDTL-K003	001	00	A1

PLOT DATE: 2017\03\30
FILE NAME: 1-0102-BDTL-K003.dgn

©CH2M HILL 2017. ALL RIGHTS RESERVED.