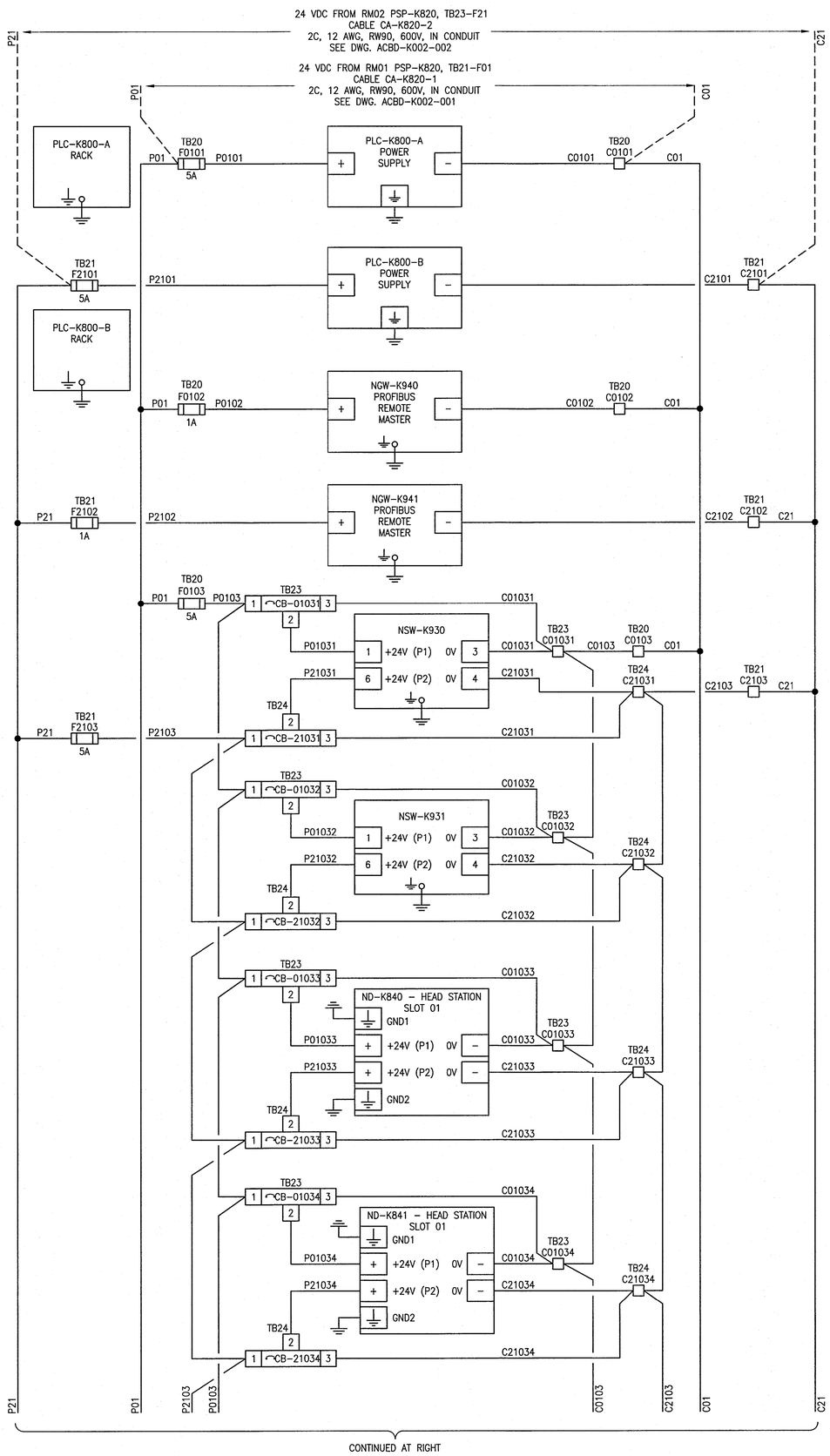

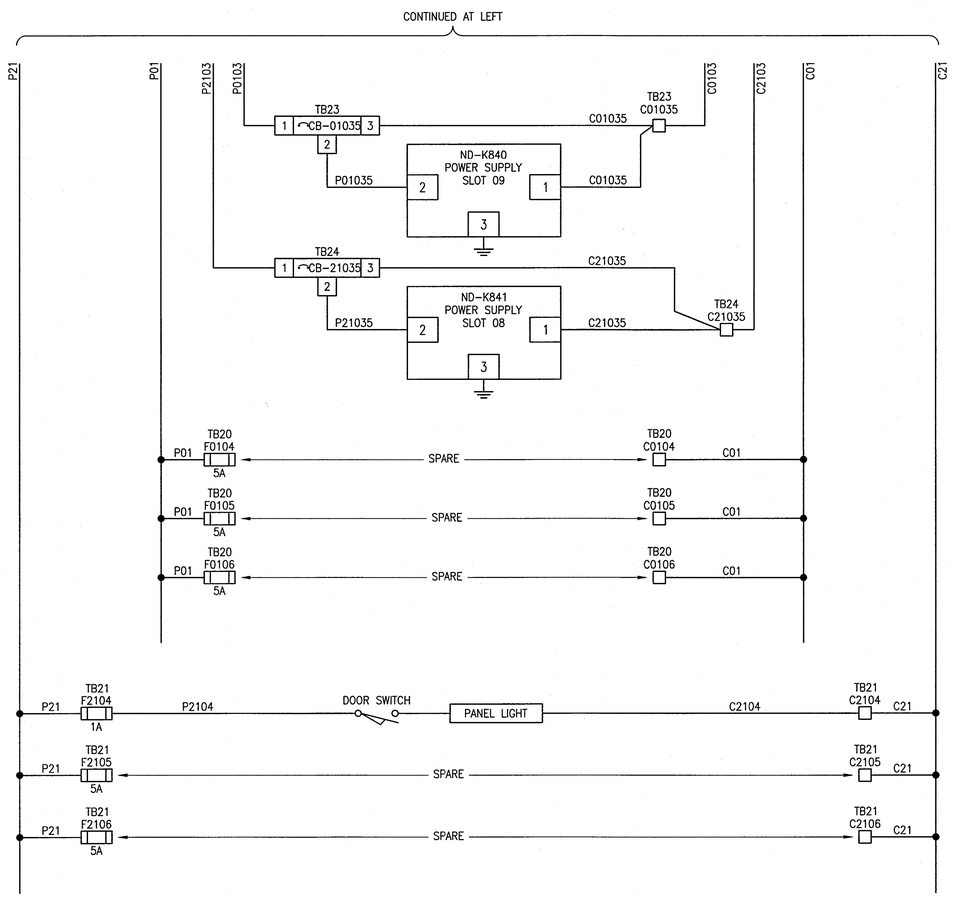

FUSE SCHEDULE

TB	IDENTIFIER	SIZE	RATING
TB20	F0101	5x20mm	5A TD
	F0102	5x20mm	1A FA
	F0103	5x20mm	5A FA
	F0104	5x20mm	5A FA
	F0105	5x20mm	5A FA
	F0106	5x20mm	5A FA
TB21	F2101	5x20mm	5A TD
	F2102	5x20mm	1A FA
	F2103	5x20mm	5A FA
	F2104	5x20mm	1A FA
	F2105	5x20mm	5A FA
	F2106	5x20mm	5A FA

NOTES
FA = FAST ACTING
TD = TIME DELAY

TERMINAL LAYOUT TB20

F0101	C0101
F0102	C0102
F0103	C0103
F0104	C0104
F0105	C0105
F0106	C0106

TERMINAL LAYOUT TB21

F2101	C2101
F2102	C2102
F2103	C2103
F2104	C2104
F2105	C2105
F2106	C2106

ELECTRONIC CIRCUIT PROTECTION SCHEDULE

TB	IDENTIFIER	SIZE	RATING
TB23	CB-01031	12.5x80mm	1A CLASS 2
	CB-01032	12.5x80mm	1A CLASS 2
	CB-01033	12.5x80mm	2A CLASS 2
	CB-01034	12.5x80mm	2A CLASS 2
	CB-01035	12.5x80mm	3A CLASS 2
TB24	CB-21031	12.5x80mm	1A CLASS 2
	CB-21032	12.5x80mm	1A CLASS 2
	CB-21033	12.5x80mm	2A CLASS 2
	CB-21034	12.5x80mm	2A CLASS 2
	CB-21035	12.5x80mm	3A CLASS 2

TERMINAL LAYOUT TB23

CB-01031
CB-01032
CB-01033
CB-01034
CB-01035
C01031
C01032
C01033
C01034
C01035

TERMINAL LAYOUT TB24

CB-21031
CB-21032
CB-21033
CB-21034
CB-21035
C21031
C21032
C21033
C21034
C21035

POWER CONSUMPTION SCHEDULE AT 24 VDC

LOAD	RM01 CURRENT (mA)	RM02 CURRENT (mA)	NOTES
PLC-K800-A	1650	–	1
PLC-K800-B	–	1650	1
NGW-K940	200	–	2
NGW-K941	–	200	2
NSW-K930	417	417	2
NSW-K931	417	417	2
ND-K840	1100	800	2
ND-K841	800	1000	2
PANEL LIGHT	–	500	2
TOTAL	4584	4984	

NOTES
1. BASED ON 55W OF POWER CONSUMPTION.
2. BASED ON DATA SHEET.

APEGM Certificate of Authorization
SNC-Lavalin Inc.
No. 4489

NO.	REVISIONS	DATE	DESIGN	CHECK
00	ISSUED FOR CONSTRUCTION – 976-2016	2017/04/05	MW	PC

CH2MHILL. SNC·LAVALIN KGS GROUP

DESIGNED BY: M. WANG
CHECKED BY: P. CHICATUN
DRAWN BY: M. WANG
APPROVED BY: E. RYCZKOWSKI
SCALE: NTS
ISSUED FOR CONSTRUCTION BY: J. SHUMKA
DATE: 2015/02/05
DATE: 2017/04/05
CONSULTANT NO.: 474248

ENGINEER'S SEAL
PROVINCE OF MANITOBA
P. CHICATUN
CHICATUN
Member
30307
REGISTERED PROFESSIONAL ENGINEER
APR. 4/2017
REVISED

Winnipeg
THE CITY OF WINNIPEG
WATER AND WASTE DEPARTMENT

SOUTH END WATER POLLUTION CONTROL CENTRE
SEWPCC UPGRADING/EXPANSION PROJECT
AUTOMATION – POWER DISTRIBUTION SCHEMATIC
HIGH RATE CLARIFICATION BUILDING
CP-K820 PLC AND DEVICE NETWORK EQUIPMENT CABINET

CITY DRAWING NUMBER: 1-0102-ACBD-K004 | SHEET: 001 | REV.: 00 | SIZE: A1

A1 SIZE – 594mm x 841mm

LAST SAVE: 2017/04/01 – 10:23am
PATH: C:\pw_workdir\ch2mhill_wbg\sh043264\d0356273\1-0102-ACBD-K004.dwg

PLOT DATE: Apr 01, 2017 – 10:23am
FILE NAME: 1-0102-ACBD-K004.dwg