A1 SIZE – 594mm x 841mm

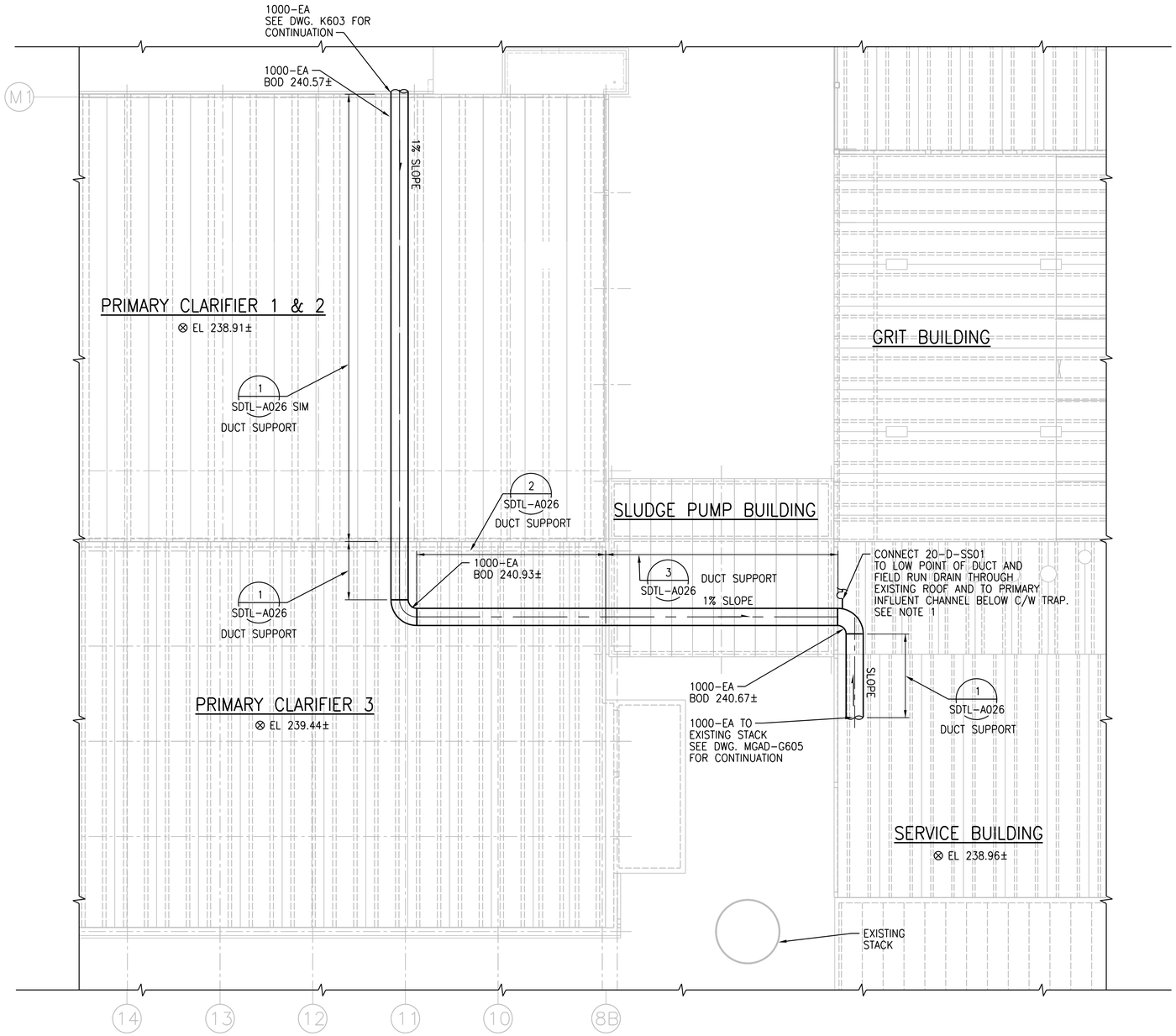

ROOF PLAN
1:150

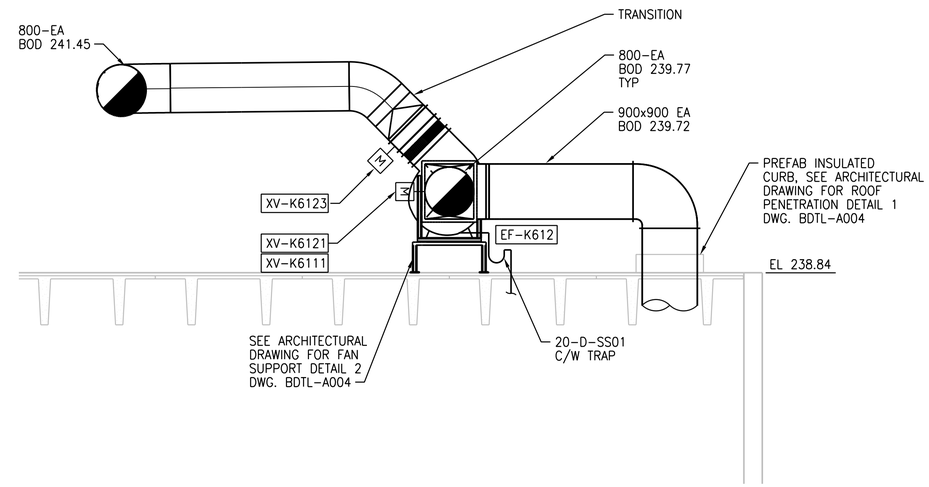

C SECTION
1:50
MGAD-K603

NOTES:

1. PROVIDE HEAT TRACING ON EXPOSED PORTION OF DRAIN PIPE, FOR ROOF PENETRATION SEE ARCHITECTURAL DETAIL. FOR HEAT TRACING DETAILS, SEE ELECTRICAL DWG. 1-0102-EGAD-B002.
2. REFER TO DUCT SCHEDULE FOR MATERIAL
3. SEE STRUCTURAL DRAWING FOR 1000-EA DUCT SUPPORT ON ROOF

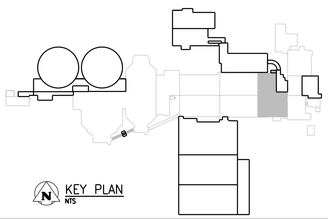

APEGM
Certificate of Authorization
CH2M HILL Canada Ltd.
No. 1441

NO.	REVISIONS	DATE	DESIGN	CHECK
00	ISSUED FOR CONSTRUCTION – 976-2016	2017/04/05	K.F.	J.C.

CH2MHILL. KGS GROUP SNC·LAVALIN

DESIGNED BY: R. BLACKWOOD	CHECKED BY: T. TRAN
DRAWN BY: K. FONG	APPROVED BY: H.T. FREIHAMMER
SCALE: 1:150	ISSUED FOR CONSTRUCTION BY: J. SHUMKA
DATE: 2017/04/05	DATE: 2017/04/05
CONSULTANT NO.: 474248	

ENGINEER'S SEAL
April 6, 2017
PROVINCE OF MANITOBA
R.P.C. BLACKWOOD
Member 40579
REGISTERED PROFESSIONAL ENGINEER

Winnipeg
THE CITY OF WINNIPEG
WATER AND WASTE DEPARTMENT

SOUTH END WATER POLLUTION CONTROL CENTRE
SEWPCC UPGRADING/EXPANSION PROJECT
MECHANICAL
HIGH RATE CLARIFICATION BUILDING
HVAC – ODOROUS EXHAUST AIR DUCT ROUTING AND SECTION

CITY DRAWING NUMBER	SHEET	REV.	SIZE
1-0102-MGAD-K605		00	A1

PLOT DATE: 2017\03\31
FILE NAME: 1-0102-MGAD-K605.dgn

©CH2M HILL 2017. ALL RIGHTS RESERVED.