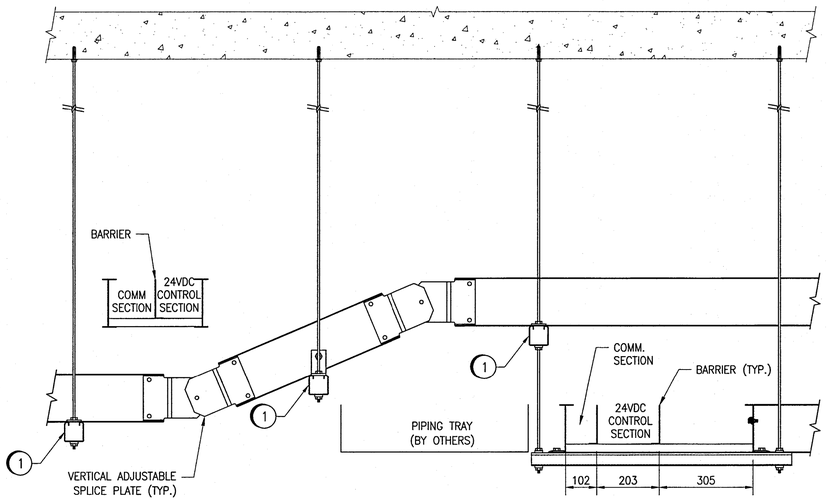


## K SECTION DETAIL
NTS
ECTR-K002

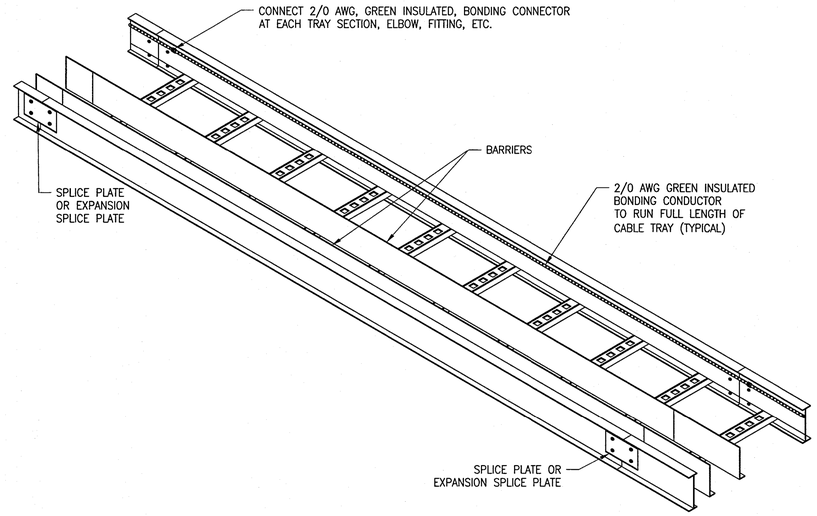


## TYPICAL HORIZONTAL CABLE TRAY RUN (2 BARRIER SHOWN)
NTS

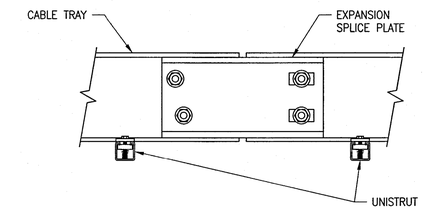


## TYPICAL EXPANSION SPLICE PLATE DETAIL
NTS

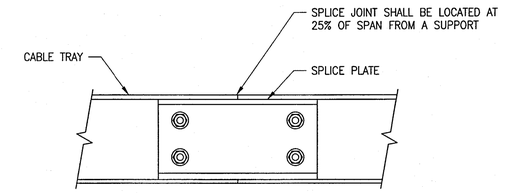


## TYPICAL SPLICE PLATE DETAIL
NTS

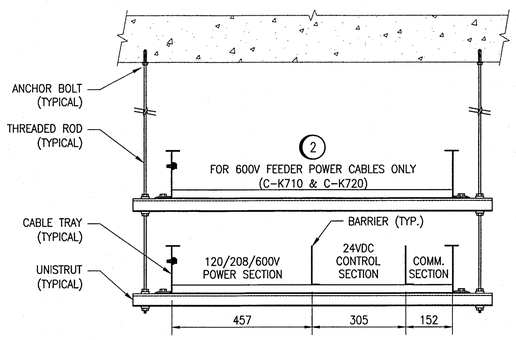


## P TRAPEZE SUPPORT (2-TIER TRAYS)
NTS
ECTR-K001

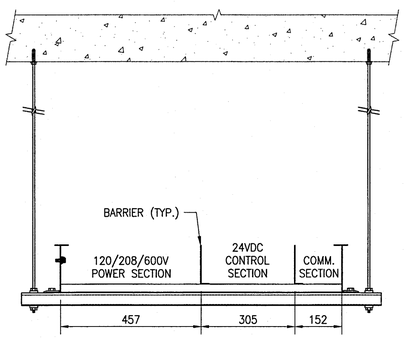


## Q TRAPEZE SUPPORT
NTS
ECTR-K001

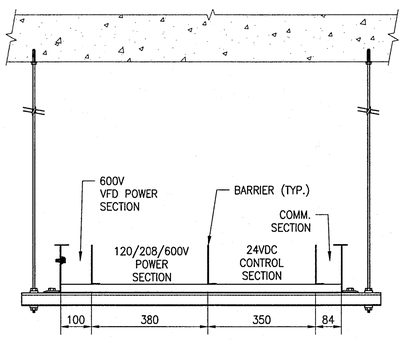


## R TRAPEZE SUPPORT
NTS
ECTR-K001

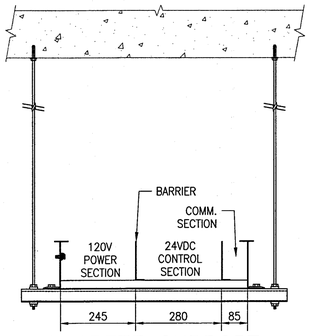


## S TRAPEZE SUPPORT
NTS
ECTR-K001

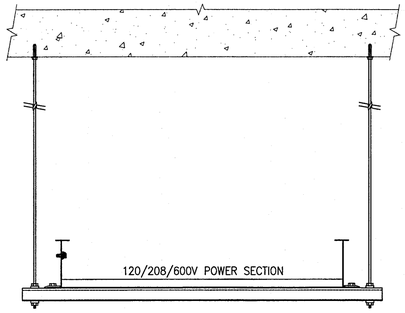


## T TRAPEZE SUPPORT
NTS
ECTR-K001

### GENERAL NOTES:

1. REFER TO DWG. 1-0102-ECTR-K002-001 FOR CABLE TRAY NOTES.
2. SECTIONS AND DETAILS SHOW GENERAL DESIGN CONCEPTS ONLY. ADJUST INSTALLATION AND MATERIALS TO REFLECT ACTUAL ON-SITE CONDITIONS / INSTALLATIONS.

### SPECIFIC NOTES:

1. SUPPORTS SHALL BE LOCATED WITHIN 610mm (2 FT.) OF EACH SIDE OF THE VERTICAL ADJUSTABLE SPLICE PLATES.
2. CABLES SHALL BE SPACED OUT (MINIMUM 1 CABLE DIAMETER) IN ACCORDANCE WITH ELECTRICAL CODE REQUIREMENTS TO AVOID ANY AMPACITY DERATING FACTORS.

| REFERENCE DRAWINGS | DESCRIPTION |
|---|---|

APEGM Certificate of Authorization
SNC-Lavalin Inc.
No. 4489

| NO. | REVISIONS | DATE | DESIGN | CHECK |
|---|---|---|---|---|
| 00 | ISSUED FOR CONSTRUCTION – 976-2016 | 2017/04/05 | SLJ | DEB |

CH2MHILL. SNC·LAVALIN KGS GROUP

| | |
|---|---|
| DESIGNED BY: S. JUGANAS | CHECKED BY: D. BECKER |
| DRAWN BY: S. JUGANAS | APPROVED BY: D. BECKER |
| SCALE: NTS | ISSUED FOR CONSTRUCTION BY: J. SHUMKA |
| DATE: 2015/02/12 | DATE: 2017/04/05 |
| CONSULTANT NO.: 474248 | |

ENGINEER'S SEAL
PROVINCE OF MANITOBA
D.E. BECKER
Member
23646
REGISTERED PROFESSIONAL ENGINEER
April 5 2017

THE CITY OF WINNIPEG
WATER AND WASTE DEPARTMENT

SOUTH END WATER POLLUTION CONTROL CENTRE
SEWPCC UPGRADING/EXPANSION PROJECT
ELECTRICAL
HIGH RATE CLARIFICATION BUILDING
CABLE TRAY DETAILS

| CITY DRAWING NUMBER | SHEET | REV. | SIZE |
|---|---|---|---|
| 1-0102-ECTR-K003 | 002 | 00 | A1 |

PLOT DATE: Mar 28, 2017 – 10:46am
FILE NAME:1-0102-ECTR-K003-002.dwg

A1 SIZE – 594mm x 841mm
LAST SAVE: 2017/03/28 – 10:46am
PATH: M:\614099\4ENG\47ELE\DD – General DWG\REV\2017-04-05 Issued for Construction – 976-2016\K HRC Building(High Rate Clarification)\DWG1-0102-ECTR-K003-002.dwg