A1 SIZE – 594mm x 841mm

GENERAL NOTES:

1. ALL PVC CONDUIT TO BE RIGID TYPE.
2. ALL METALLIC CONDUIT TO BE RIGID, THREADED, ALUMINUM.
3. ALL SLACK CONDUCTOR LENGTHS TO ALLOW FOR FROST HEAVING AT INTERVALS WHERE GROUND CONDUCTORS ARE AFFIXED TO FACILITY STRUCTURES.
4. ALL CONDUIT ROUTING SHALL BE APPROPRIATELY SUPPORTED.
5. PROVIDE WEATHERPROOF SEAL TO ALL CONDUIT PENETRATION INTO THE BUILDING.

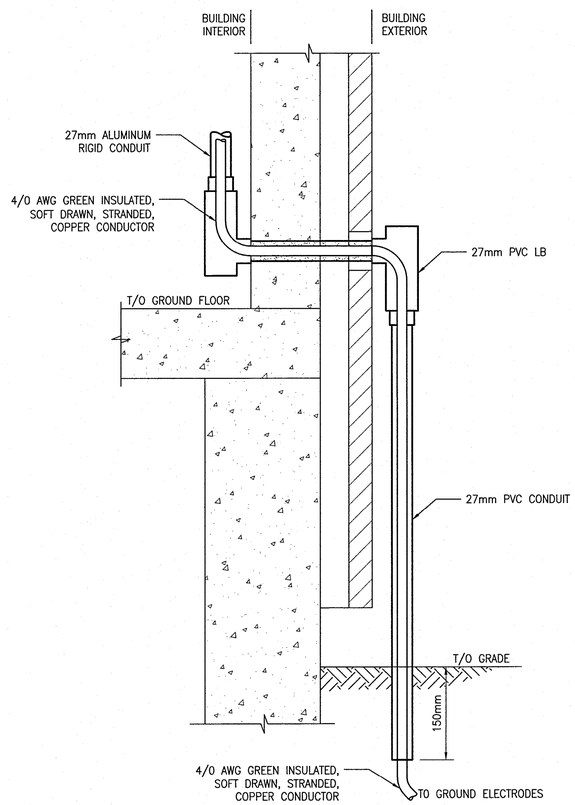

1 BUILDING ENTRY ABOVE GROUND
NTS

REFERENCE DRAWINGS	DESCRIPTION
1-0102-EGRD-K002	GROUNDING LAYOUT – GROUND FLOOR

APEGM Certificate of Authorization
SNC-Lavalin Inc.
No. 4489

NO.	REVISIONS	DATE	DESIGN	CHECK
02	ISSUED FOR CONSTRUCTION – 976-2016	2017/04/05	SLJ	DEB
01	ISSUED FOR CONSTRUCTION	10/2015	SLJ	DEB
00	ISSUED FOR TENDER	08/2015	SLJ	DEB

CH2MHILL. SNC·LAVALIN KGS GROUP

DESIGNED BY: S. JUGANAS	CHECKED BY: E. RYCZKOWSKI
DRAWN BY: S. JUGANAS	APPROVED BY: D. BECKER
SCALE: NTS	ISSUED FOR CONSTRUCTION BY: J. SHUMKA
DATE: 2015/07/22	DATE: 2017/04/05
CONSULTANT NO.: 474248	

ENGINEER'S SEAL
PROVINCE OF MANITOBA – D.E. BECKER – Member 23646 – REGISTERED PROFESSIONAL ENGINEER
April 5/2017

Winnipeg THE CITY OF WINNIPEG
WATER AND WASTE DEPARTMENT

SOUTH END WATER POLLUTION CONTROL CENTRE
SEWPCC UPGRADING/EXPANSION PROJECT
ELECTRICAL – GROUNDING
HIGH RATE CLARIFICATION BUILDING
DETAILS

CITY DRAWING NUMBER	SHEET	REV.	SIZE
1-0102-EGRD-K003	001	02	A1

LAST SAVE: 2017/03/24 – 9:41am
PATH: C:\DWG\1-0102-EGRD-K003.dwg

PLOT DATE: Mar 24, 2017 – 9:41am
FILE NAME: 1-0102-EGRD-K003.dwg