A1 SIZE – 594mm x 841mm

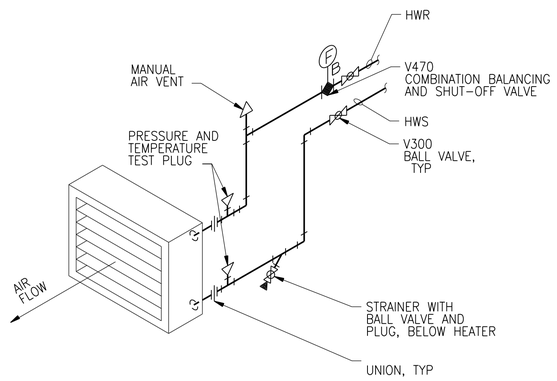

NOTES:

1. DETAIL GIVES REQUIRED SEQUENCE OF EQUIPMENT AND VALVES. PIPING ARRANGEMENT MAY VARY TO SUIT FIELD REQUIREMENTS.

HORIZONTAL UNIT HEATER CONNECTION

NTS

2380-436

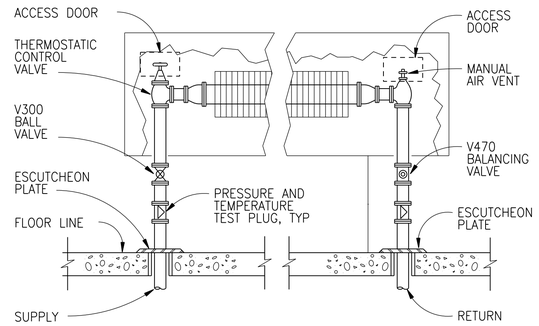

FINNED TUBE CONVECTOR CONNECTION

NTS

2380-501

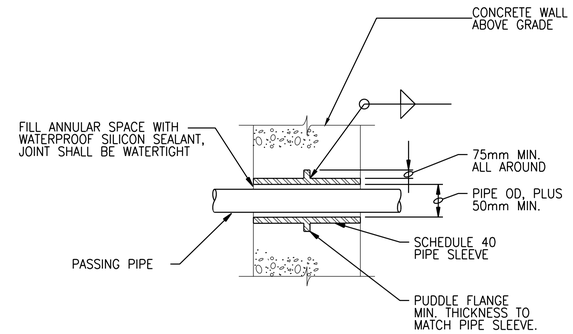

NOTES:

1. ALL DIMENSIONS IN MILLIMETERS, UNLESS OTHERWISE NOTED.
2. DO NOT USE WHERE SUBJECT TO HYDROSTATIC PRESSURE. PAINT ENTIRE SLEEVE AND PUDDLE FLANGE AS SPECIFIED, PRIOR TO CONCRETE PLACEMENT.
3. ALL PIPE SUPPORT COMPONENTS SHALL BE DESIGNED AND FABRICATED FROM STAINLESS STEEL MATERIAL, UNLESS NOTED OTHERWISE.
4. SEE ALSO ARCHITECTURAL DETAIL 4 ON DWG. 1-0102-BDTL-A003.
5. USE STAINLESS STEEL 316L PIPE SLEEVE FOR STAINLESS STEEL PIPES.
6. USE CARBON STEEL EPOXY COATED FOR ALL OTHERS PIPE MATERIALS.
7. REFER TO ARCHITECTURAL DETAILS FOR PENETRATION OF FINISHED WALL.

PIPE SLEEVE THRU EXTERIOR CONCRETE WALLS ABOVE GRADE

NTS

4027-604

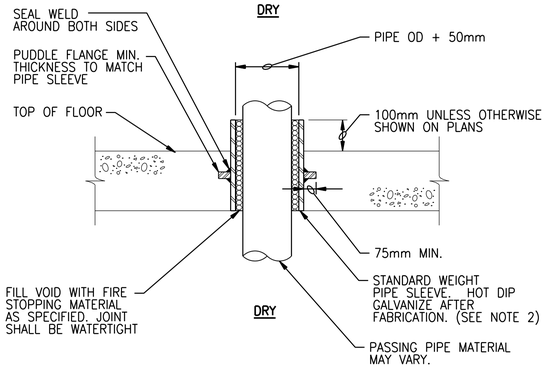

NOTES:

1. ALL DIMENSIONS IN MILLIMETERS, UNLESS OTHERWISE NOTED.
2. COAT FLOOR SLEEVE WITH SPECIFIED PAINT SYSTEM PRIOR TO CONCRETE PLACEMENT.
3. ALL PIPE SUPPORT COMPONENTS SHALL BE DESIGNED FABRICATED FROM STAINLESS STEEL MATERIAL, UNLESS NOTED OTHERWISE.

FLOOR SLEEVE (DRY)

NTS

4027-620

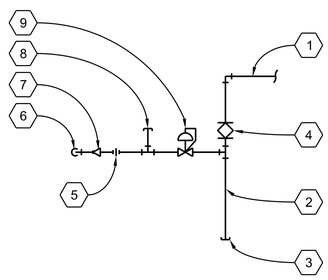

1. FROM NATURAL GAS DISTRIBUTION SYSTEM, SIZE AS SHOWN ON PLANS
2. 6" LONG DIRT LEG LOCATED AS CLOSE TO INLET OF EQUIPMENT AS POSSIBLE.
3. REMOVABLE CAP
4. PLUG VALVE V420, LOCATED CLOSE TO INLET SIDE OF DIRT LEG TEE
5. GROUND JOINT UNION
6. CONNECT TO EQUIPMENT GAS TRAIN, INCLUDING 316 SST FLEXIBLE CONNECTOR OR RIGID PIPE FOR 1" DIA AND LARGER CONNECTIONS, TYP
7. TRANSITION TO UNIT CONNECTION, SIZE AS REQUIRED
8. 1/8 " NPT PLUGGED TAPPING ACCESSIBLE FOR TEST GAUGE CONNECTION
9. GAS PESSURE REGULATOR

GAS FIRED EQUIPMENT CONNECTION

NTS

2210-801

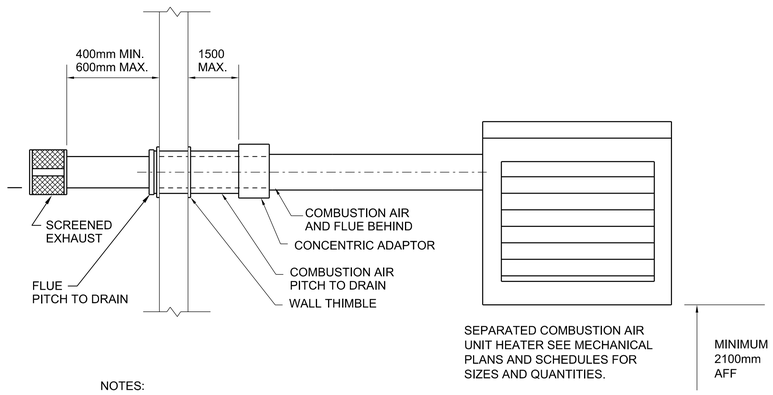

NOTES:

1. PROVIDE DRIP LEG ON GAS SUPPLY LINE AND SHUT-OFF BALL VALVE FOR GAS SERVICE
2. REFER TO STRUCTURAL DRAWINGS FOR ADDITIONAL SUPPORT OF UNIT HEATERS IN PROCESS TREATMENT BUILDING.
3. PROVIDE DRIP LEG ON COMBUSTION AIR AND EXHAUST AIR LOW POINT WHEN UNIT HEATER COMBUSTION AIR/ EXHAUST HOOKUP ELEVATION IS LOWER THAN THE COMBUSTION AIR/ EXHAUST PIPE AT WALL PENETRATION.

GAS FIRED UNIT HEATER DETAIL

NTS

2355-426

©CH2M HILL 2017. ALL RIGHTS RESERVED.

APEGM
Certificate of Authorization
CH2M HILL Canada Ltd.
No. 1441

NO.	REVISIONS	DATE	DESIGN	CHECK
02	ISSUED FOR CONSTRUCTION – 976-2016	2017/04/05	K.F.	J.C.
01	ISSUED FOR CONSTR – B.O. 899-2015	04/2016	K.F.	J.C.
00	ISSUED FOR TENDER – B.O. 899-2015	01/2016	K.F.	J.C.

CH2MHILL. SNC·LAVALIN KGS GROUP

DESIGNED BY: T. TRAN
CHECKED BY: D. CUDDINGTON
DRAWN BY: K. FONG
APPROVED BY: H.T. FREIHAMMER
SCALE: NTS
ISSUED FOR CONSTRUCTION BY: J. SHUMKA
DATE: 2017/04/05
DATE: 2017/04/05
CONSULTANT NO.: 474248

ENGINEER'S SEAL
PROVINCE OF MANITOBA T.T. TRAN Member 40578 REGISTERED PROFESSIONAL ENGINEER
T.T. TRAN April 19/17.

Winnipeg
THE CITY OF WINNIPEG
WATER AND WASTE DEPARTMENT

SOUTH END WATER POLLUTION CONTROL CENTRE
SEWPCC UPGRADING/EXPANSION PROJECT
MECHANICAL
HVAC
STANDARD DETAILS (4)

CITY DRAWING NUMBER	SHEET	REV.	SIZE
1-0102-MDTL-A008		02	A1

PLOT DATE: 2017\03\29
FILE NAME: 1-0102-MDTL-A008.dgn