A1 SIZE – 594mm x 841mm

INTERIOR LIGHTING CONTROL SCHEMATIC

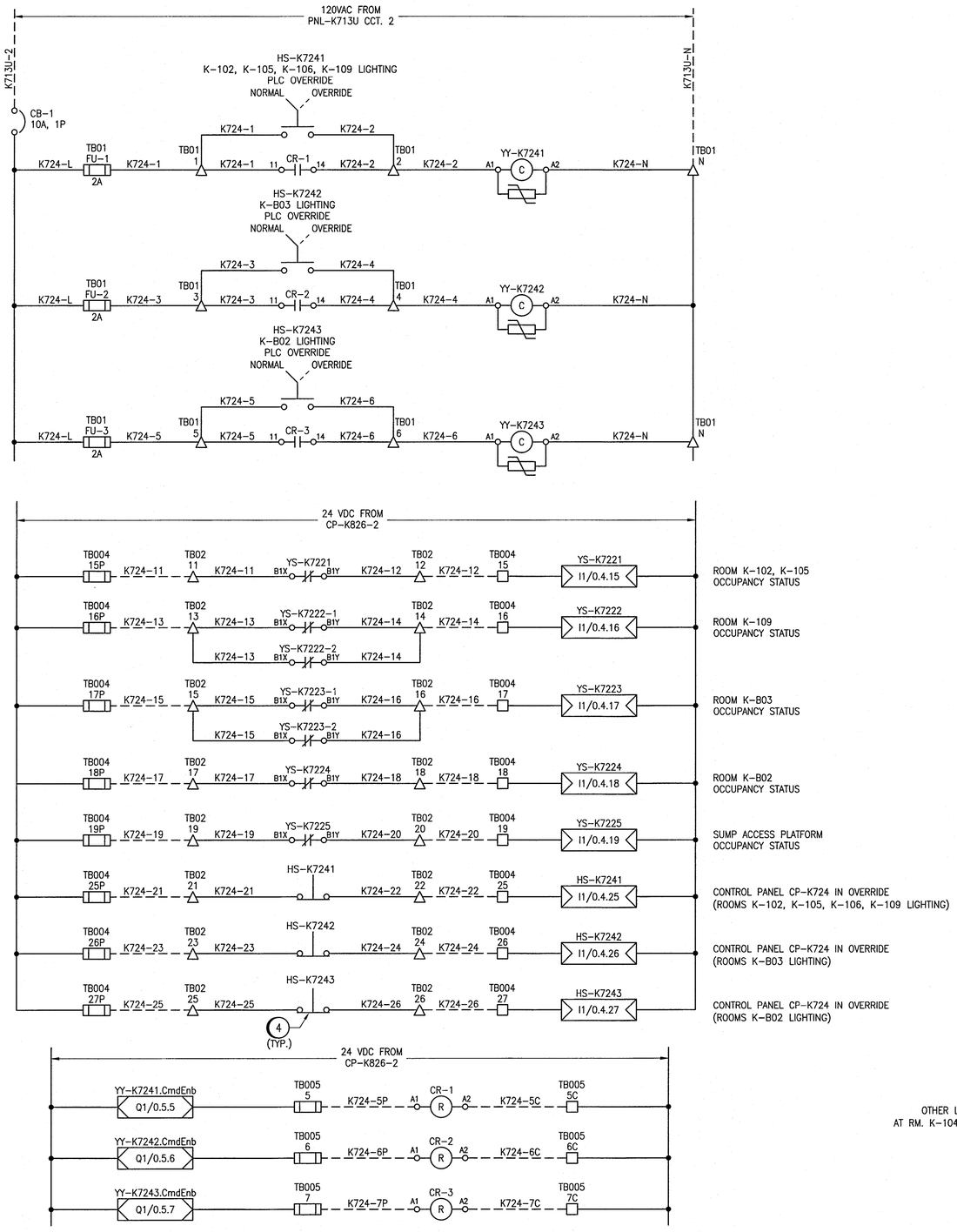

SPECIFIC NOTES:

1. 3-WAY, MAINTAINED, TOGGLE STYLE LIGHT SWITCH LOCATED ADJACENT TO ROOM ENTRANCE. TYPICAL.
2. SINGLE POLE, MAINTAINED, TOGGLE STYLE LIGHT SWITCH LOCATED ADJACENT TO ROOM ENTRANCE. TYPICAL.
3. OVERRIDE "OFF" LIGHT SWITCH FOR TANK LIGHTING.
4. NORMALLY CLOSE AUXILIARY CONTACT FROM SELECTOR SWITCH ABOVE (CLOSE IN NORMAL POSITION, OPEN IN OVERRIDE POSITION).
5. RELAY WITH 347V COIL OR ALTERNATIVE STEP DOWN XFMR C/W 120V COIL RELAY.

LEGEND:

- TERMINAL LOCATED IN CONTROL PANEL CP-K827
- TERMINAL LOCATED IN LIGHTING CONTROL PANEL CP-K724
- METAL OXIDE VARISTOR (MOV)
- FUSE
- CONTROL RELAY COIL
- LIGHTING CONTACTOR COIL
- N.O. CONTACT
- LINE VOLTAGE SWITCH
- 3-WAY LINE VOLTAGE SWITCH
- 2-POSITION, KEYED SELECTOR SWITCH (OFF / ON)
- SELECTOR SWITCH N.C. CONTACT
- PLC INPUT
- PLC OUTPUT

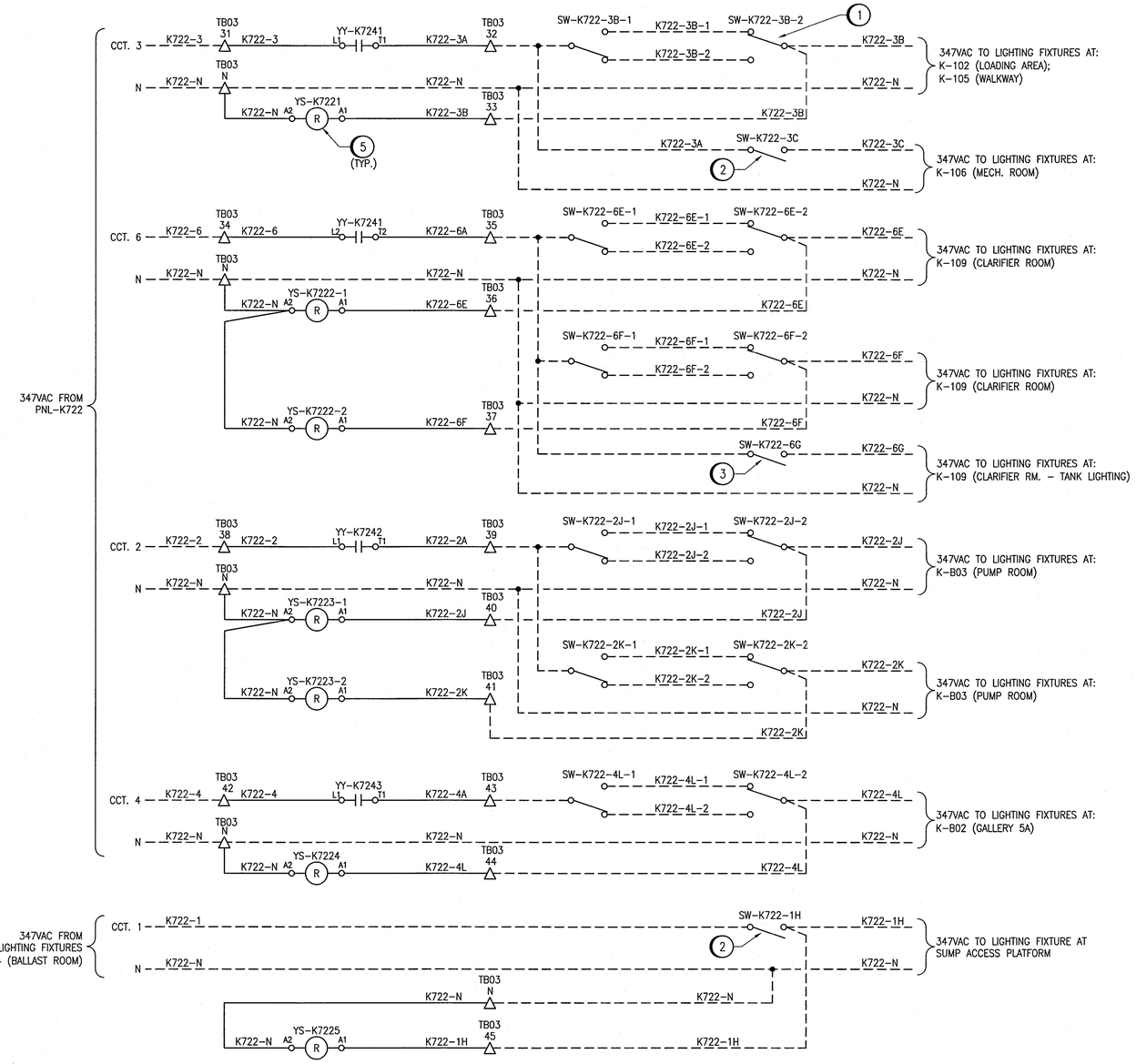

REFERENCE DRAWINGS	DESCRIPTION
1-0102-ECBD-K004	CABINET LAYOUT, CP-K724
1-0102-ESCH-K001	PANEL SCHEDULES & DETAILS

APEGM Certificate of Authorization
SNC-Lavalin Inc.
No. 4489

NO.	REVISIONS	DATE	DESIGN	CHECK
00	ISSUED FOR CONSTRUCTION – 976-2016	2017/04/05	SLJ	DEB

CH2MHILL. SNC·LAVALIN KGS GROUP

DESIGNED BY: S. JUGANAS	CHECKED BY: E. RYCZKOWSKI
DRAWN BY: S. JUGANAS	APPROVED BY: D. BECKER
SCALE: NTS	ISSUED FOR CONSTRUCTION BY: J. SHUMKA
DATE: 2015/02/19	DATE: 2017/04/05
CONSULTANT NO.: 474248	

ENGINEER'S SEAL: PROVINCE OF MANITOBA – D.E. BECKER – Member 23646 – REGISTERED PROFESSIONAL ENGINEER – April 5th 2017

THE CITY OF WINNIPEG
WATER AND WASTE DEPARTMENT

SOUTH END WATER POLLUTION CONTROL CENTRE
SEWPCC UPGRADING/EXPANSION PROJECT
ELECTRICAL – INTERIOR LIGHTING CONTROL
HIGH RATE CLARIFICATION BUILDING
CP-K724 SCHEMATIC AND WIRING DIAGRAM

CITY DRAWING NUMBER	SHEET	REV.	SIZE
1-0102-ELTG-K004	001	00	A1

LAST SAVE: 2017/03/24 – 9:42am
PATH: C:\DWG\1-0102-ELTG-K004-001.dwg

PLOT DATE: Mar 24, 2017 – 9:42am

FILE NAME: 1-0102-ELTG-K004-001.dwg