A1 SIZE – 594mm x 841mm

SCHEMATIC/FIELD CONNECTION DIAGRAM

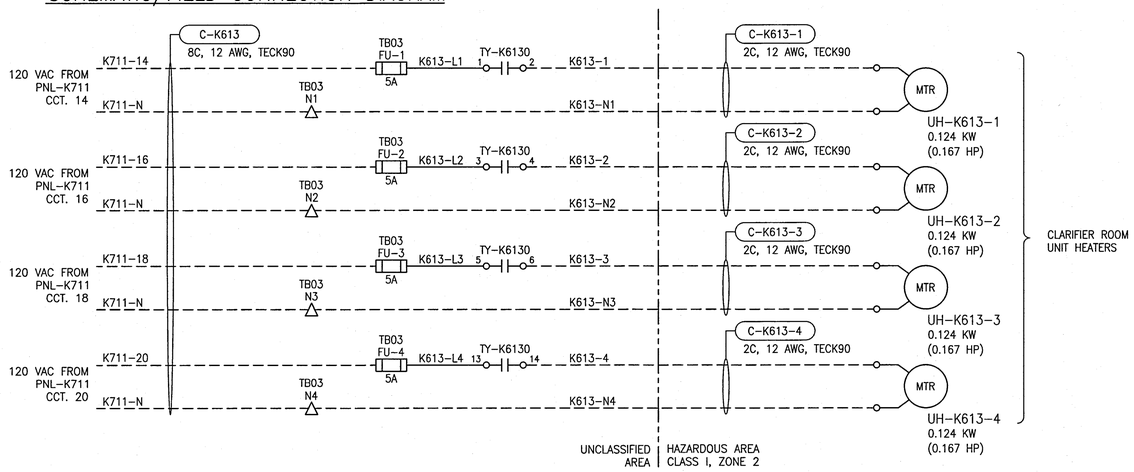

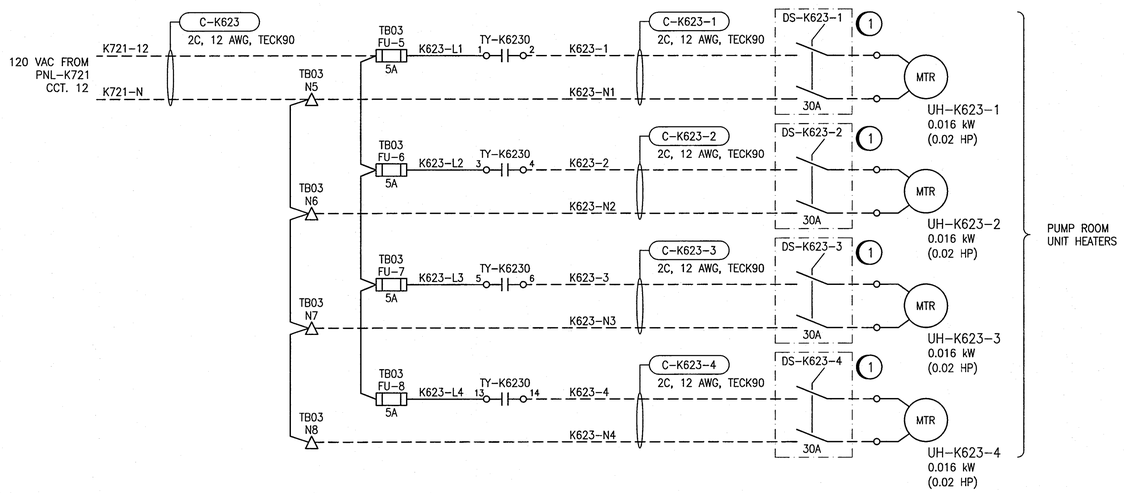

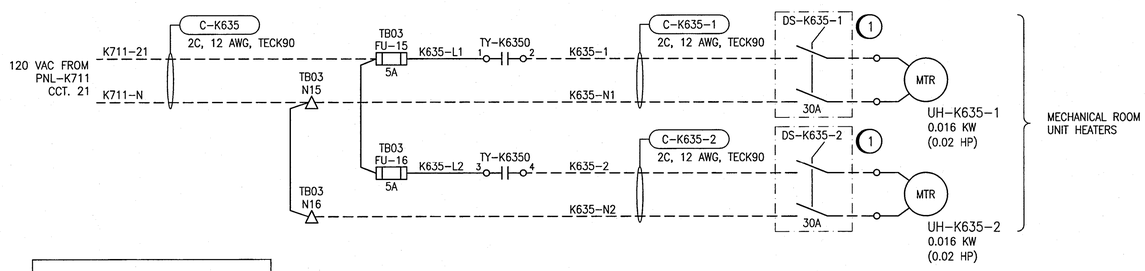

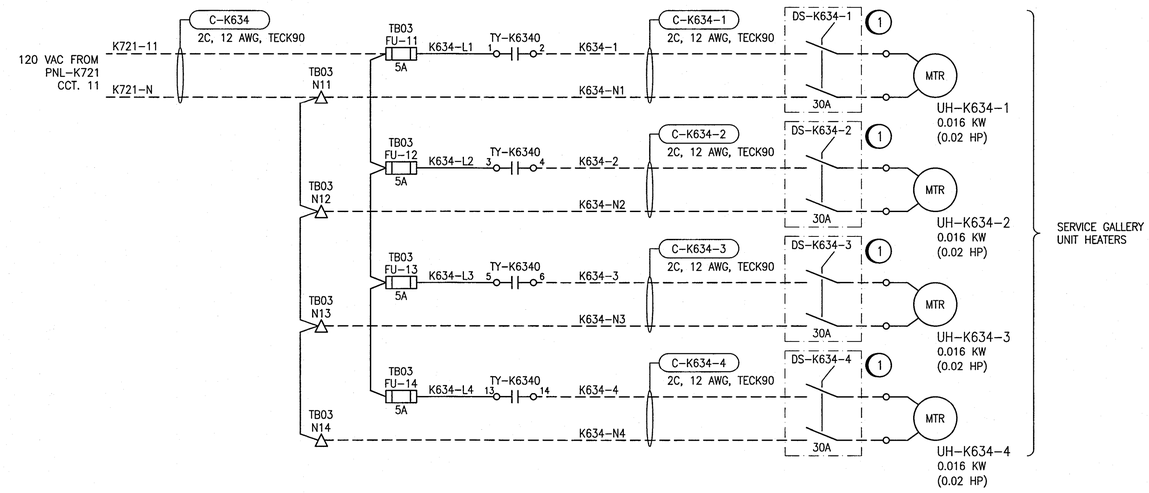

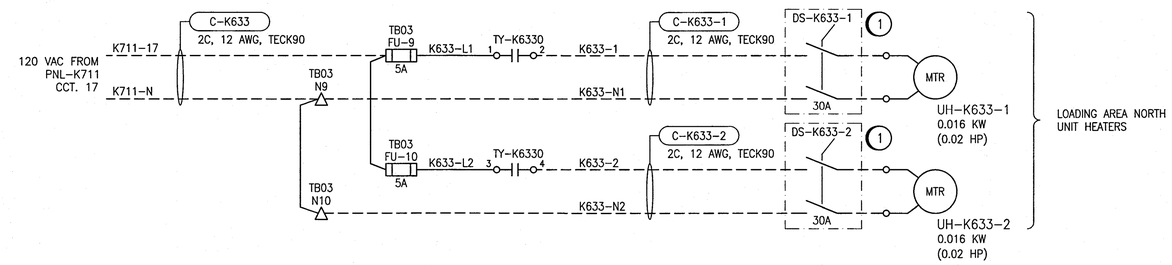

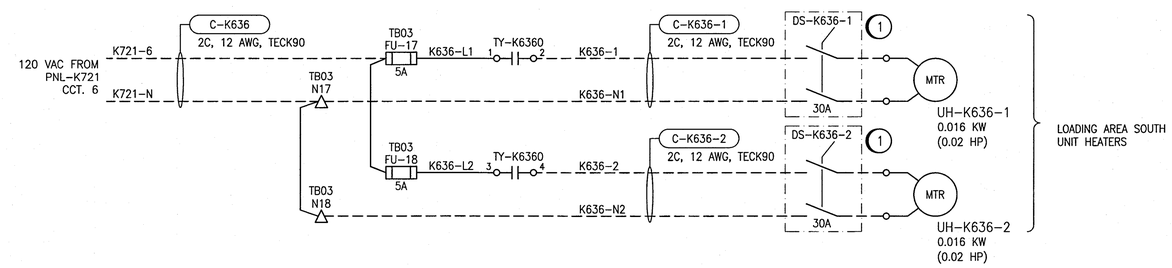

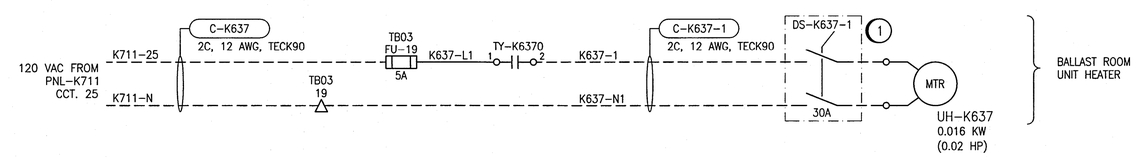

LEGEND:

△ CP-K830 TERMINAL

SPECIFIC NOTES:

(1) PROVIDE 2 POLE SQUARE D TYPE K MANUAL SWITCHES AT UNIT HEATER. SWITCHES ARE TO BE 2-POLE, TOGGLE TYPE, AND NEMA 4 RATED.

NOTES:

1. PROVIDE INDIVIDUAL LOCK-OFF DEVICES FOR ALL UNIT HEATER BRANCH BREAKERS.
2. ALL FUSES AND CONTACTS LOCATED IN CP-K830 UNLESS SHOWN OTHERWISE.
3. UNIT HEATER MOTORS HAVE INTEGRAL THERMAL OVERLOADS.

REFERENCE DRAWINGS	DESCRIPTION
1-0102-ACBD-K061	CABINET LAYOUT, UNIT HEATERS CONTROL PANEL CP-K830

APEGM Certificate of Authorization
SNC-Lavalin Inc.
No. 4489

NO.	REVISIONS	DATE	DESIGN	CHECK
00	ISSUED FOR CONSTRUCTION – 976-2016	2017/04/05	SSB	TMC

CH2MHILL. SNC·LAVALIN KGS GROUP

DESIGNED BY: S. BOGHOSIAN	CHECKED BY: T. CHURCH
DRAWN BY: S. BOGHOSIAN	APPROVED BY: E. RYCZKOWSKI
SCALE: NTS	ISSUED FOR CONSTRUCTION BY: J. SHUMKA
DATE: 2015/07/27	DATE: 2017/04/05
CONSULTANT NO.: 474248	

ENGINEER'S SEAL
PROVINCE OF MANITOBA
T.M. CHURCH
Member 32682
REGISTERED PROFESSIONAL ENGINEER
Apr. 9, 2017

Winnipeg
THE CITY OF WINNIPEG
WATER AND WASTE DEPARTMENT

SOUTH END WATER POLLUTION CONTROL CENTRE
SEWPCC UPGRADING/EXPANSION PROJECT
ELECTRICAL – MOTOR STARTER SCHEMATIC
HIGH RATE CLARIFICATION BUILDING
UNIT HEATERS K613, K623, K633, K634, K635, K636, K637

CITY DRAWING NUMBER	SHEET	REV.	SIZE
1-0102-EMCL-K614	001	00	A1

LAST SAVE: 2017/03/24 – 9:54am
PATH: C:\DWG\1-0102-EMCL-K614-001.dwg

PLOT DATE: Mar 24, 2017 – 9:54am

FILE NAME:1-0102-EMCL-K614-001.dwg