B SIZE - 279mm x 432mm

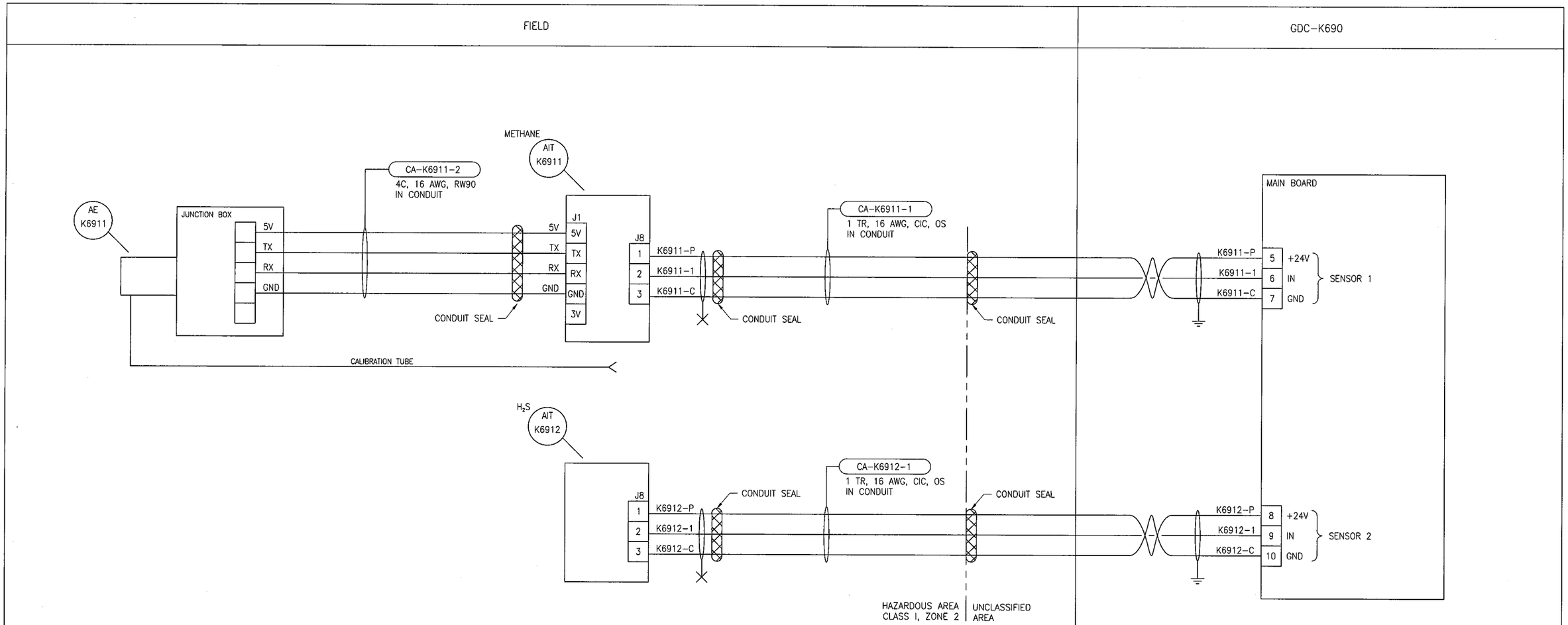


| ID | DESCRIPTION | MANUFACTURER | MODEL | ORDER FORM NUMBER |
|---|---|---|---|---|
| AIT-K6911 | GAS DETECTOR | MSA | ULTIMA XIR, XP HART PORT | E38C4D00001100 |
| AE-K6911 | SENSOR AND JUNCTION BOX | MSA | ULTIMA X REMOTE SENSOR | |
| AIT-K6912 | GAS DETECTOR AND SENSOR | MSA | ULTIMA XE | E16C0S00001100 |

NOTES

APEGM Certificate of Authorization
SNC-Lavalin Inc.
No. 4489

| NO. | REVISIONS | DATE | DESIGN | CHECK |
|---|---|---|---|---|
| 00 | ISSUED FOR CONSTRUCTION - 976-2016 | 2017/04/05 | SSB | TMC |

SNC·LAVALIN CH2MHILL KGS GROUP CONSULTING ENGINEERS

| | |
|---|---|
| DESIGNED BY: S. BOGHOSIAN | CHECKED BY: T. CHURCH |
| DRAWN BY: S. BOGHOSIAN | APPROVED BY: E. RYCZKOWSKI |
| SCALE: NTS | DATE: 2015/02/26 |
| ISSUED FOR CONSTRUCTION BY: J. SHUMKA | DATE: 2017/04/05 |
| CONSULTANT NO.: 474248 | |

ENGINEER'S SEAL
PROVINCE OF MANITOBA
TOM CHURCH
Member 32682
REGISTERED PROFESSIONAL ENGINEER
Apr. 5, 2017

Winnipeg
THE CITY OF WINNIPEG
WATER AND WASTE DEPARTMENT

SOUTH END WATER POLLUTION CONTROL CENTRE
SEWPCC UPGRADING/EXPANSION PROJECT
AUTOMATION - LOOP DIAGRAM
AIT-K6911 AND AIT-K6912
CLARIFIER ROOM GAS DETECTION

| CITY DRAWING NUMBER | SHEET | REV. | SIZE |
|---|---|---|---|
| 1-0102-AILD-K630 | 001 | 00 | B |

LAST SAVE: 2017/04/01 - 10:46am
PATH: C:\pw_workdir\ch2mhill_wbg\sh043264\d0356273\1-0102-AILD-K630.dwg

PLOT DATE: Apr 01, 2017 - 10:46am
FILE NAME: 1-0102-AILD-K630.dwg