A1 SIZE – 594mm x 841mm

FIELD CONNECTION DIAGRAM:

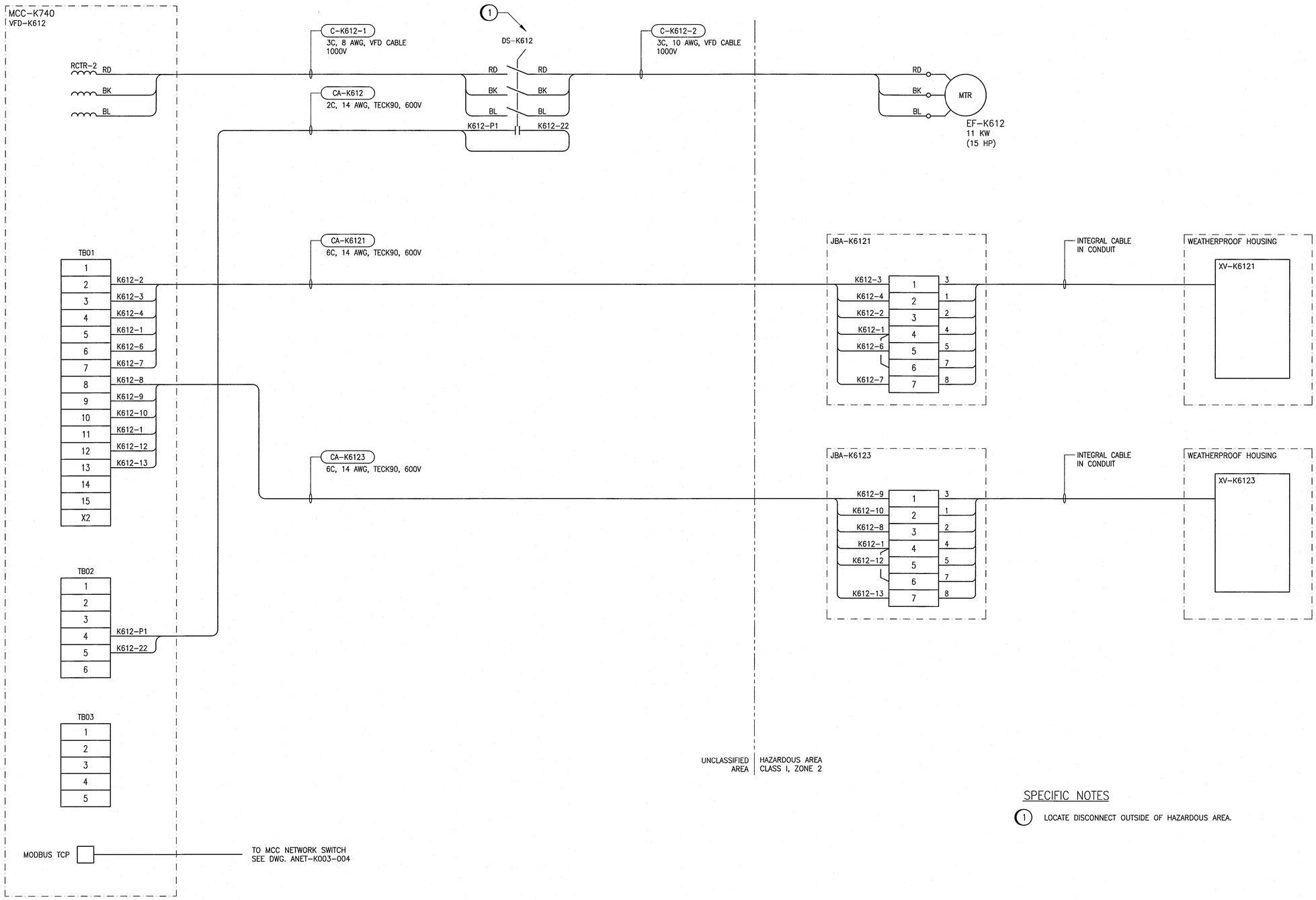

SPECIFIC NOTES

1. LOCATE DISCONNECT OUTSIDE OF HAZARDOUS AREA.

NOTES

1. DAMPER POSITION SWITCHES SHOWN WITH DAMPER IN CLOSED POSITION.

REFERENCE DRAWINGS	DESCRIPTION
1–0102–ECBD–K001	MCC ELEVATION
1–0102–ESLD–K001	SINGLE LINE DIAGRAM

APEGM Certificate of Authorization
SNC-Lavalin Inc.
No. 4489

NO.	REVISIONS	DATE	DESIGN	CHECK
00	ISSUED FOR CONSTRUCTION – 976–2016	2017/04/05	SSB	TMC

CH2MHILL. SNC·LAVALIN KGS GROUP

DESIGNED BY: S. BOGHOSIAN	CHECKED BY: T. CHURCH
DRAWN BY: MJ. PERSSON	APPROVED BY: E. RYCZKOWSKI
SCALE: NTS	ISSUED FOR CONSTRUCTION BY: J. SHUMKA
DATE: 2016/09/04	DATE: 2017/04/05
CONSULTANT NO.: 474248	

ENGINEER'S SEAL
PROVINCE OF MANITOBA
T.M. CHURCH
Member 32682
REGISTERED PROFESSIONAL ENGINEER
Apr. 4, 2017

Winnipeg
THE CITY OF WINNIPEG
WATER AND WASTE DEPARTMENT

SOUTH END WATER POLLUTION CONTROL CENTRE
SEWPCC UPGRADING/EXPANSION PROJECT
ELECTRICAL – MOTOR STARTER SCHEMATIC
HIGH RATE CLARIFICATION BUILDING
EF–K612 CLARIFIER ROOM EXHAUST FAN

CITY DRAWING NUMBER	SHEET	REV.	SIZE
1–0102–EMCL–K602	002	00	A1

LAST SAVE: 2017/03/24 – 9:53am
PATH: C:\DWG\1–0102–EMCL–K602–002.dwg

PLOT DATE: Mar 24, 2017 – 9:53am

FILE NAME:1–0102–EMCL–K602–002.dwg