A1 SIZE – 594mm x 841mm

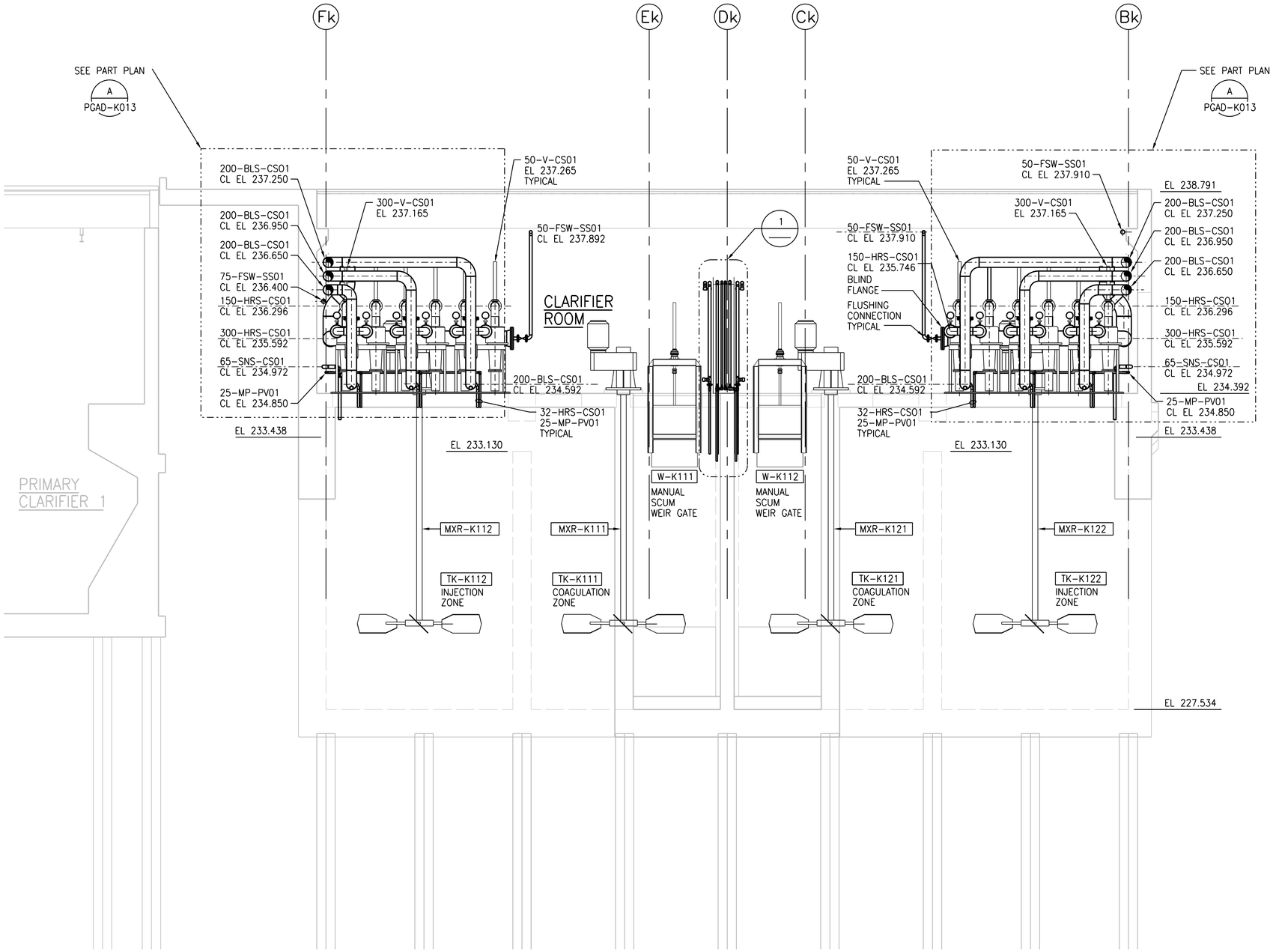

C SECTION
1:50
PGAD-K001, K002

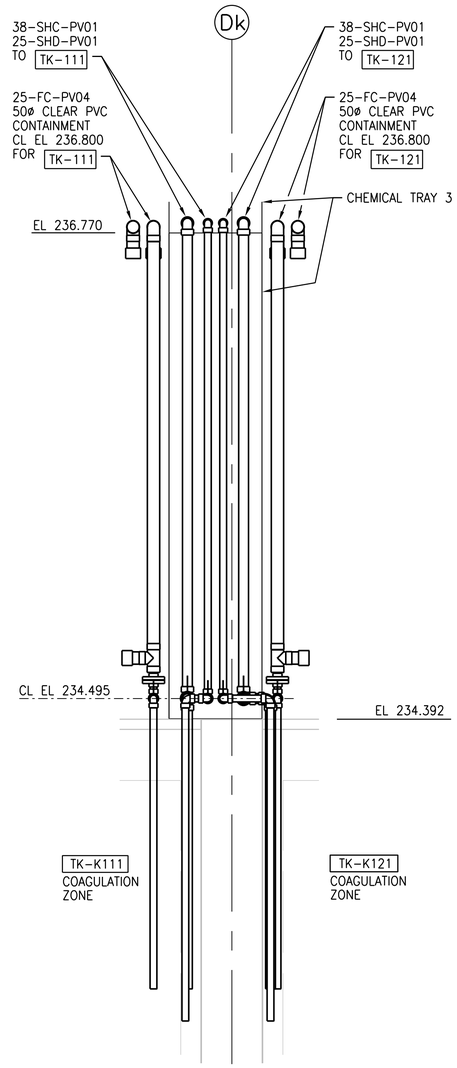

1 DETAIL
1:15

©CH2M HILL 2017. ALL RIGHTS RESERVED.

APEGM
Certificate of Authorization
CH2M HILL Canada Ltd.
No. 1441

NO.	REVISIONS	DATE	DESIGN	CHECK
02	ISSUED FOR CONSTRUCTION – 976-2016	2017/04/05	B.C.	J.C.
01	ISSUED FOR CONSTRUCTION	10/2015	B.C.	J.C.
00	ISSUED FOR TENDER	08/2015	B.C.	J.C.

CH2MHILL
SNC·LAVALIN
KGS GROUP

DESIGNED BY: J. KRAEMER
CHECKED BY: F. ABSI
DRAWN BY: B. COOPER
APPROVED BY: H. T. FREIHAMMER
SCALE: 1:50
ISSUED FOR CONSTRUCTION
BY: J. SHUMKA
DATE: 2017/04/05
DATE: 2017/04/05
CONSULTANT NO.: 474248

ENGINEER'S SEAL
PROVINCE OF MANITOBA
April 5, 2017
F. J. ABSI
Member
36875
REGISTERED PROFESSIONAL ENGINEER
F. J. Absi

Winnipeg
THE CITY OF WINNIPEG
WATER AND WASTE DEPARTMENT

SOUTH END WATER POLLUTION CONTROL CENTRE
SEWPCC UPGRADING/EXPANSION PROJECT
PROCESS
HIGH RATE CLARIFICATION BUILDING
SECTION C

CITY DRAWING NUMBER	SHEET	REV.	SIZE
1-0102-PGAD-K007		02	A1

PLOT DATE: 2017\03\31
FILE NAME: