A1 SIZE – 594mm x 841mm

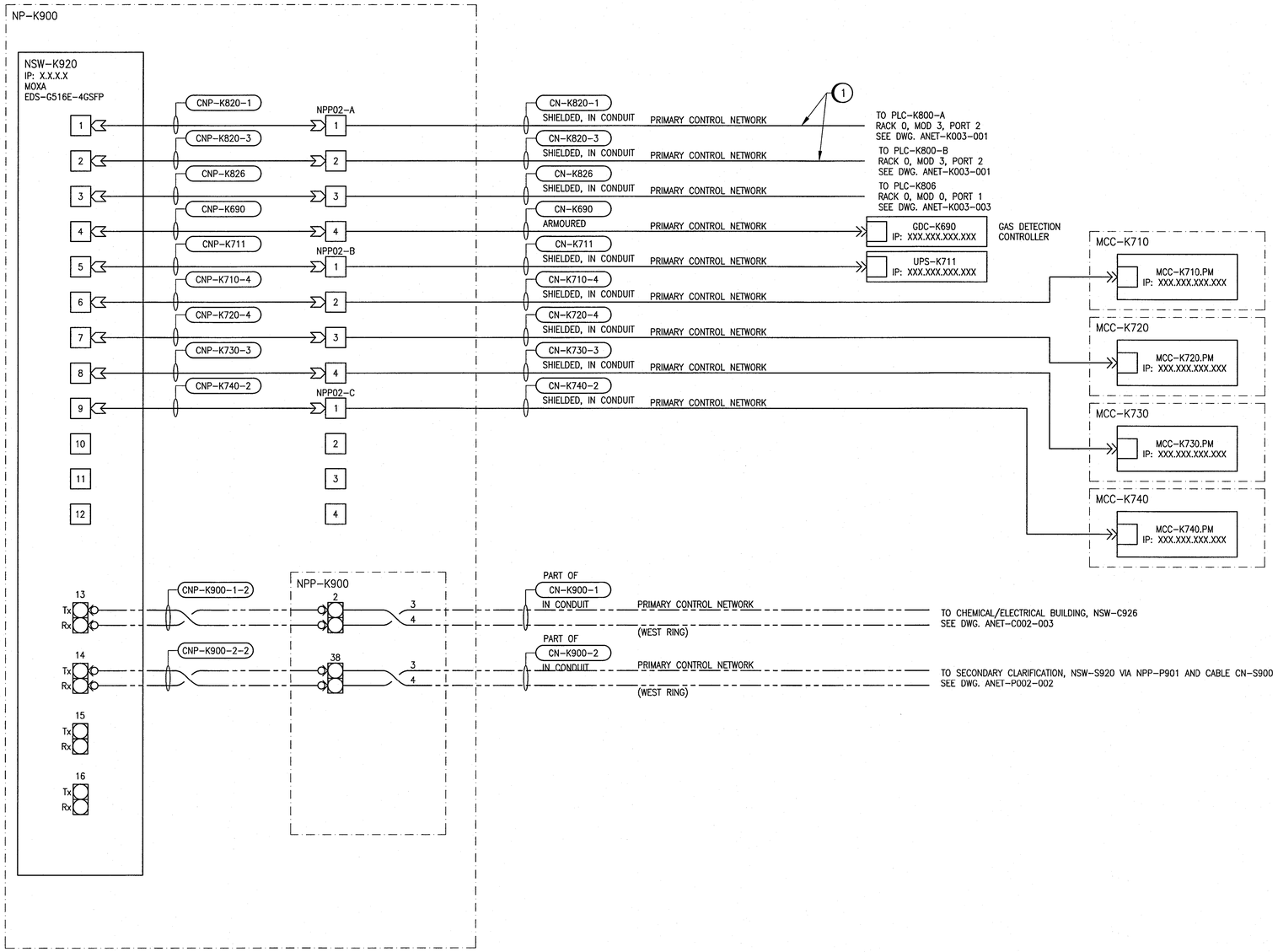

LEGEND:

- RJ45 PORT OR PATCH PANEL
- FIBRE PORT OR PATCH PANEL
- WALL PLATE RJ45 JACK
- CAT6 CABLE
- FIBRE CABLE
- LC FIBRE CONNECTOR
- RJ45 CONNECTOR UNSHIELDED
- RJ45 CONNECTOR SHIELDED

SPECIFIC NOTES:

1. PRIMARY CONTROL NETWORK CABLES CN-K820-1 AND CN-K820-3 TO BE RUN WITH A MINIMUM SEPARATION (1.22m WHERE THE CABLES ARE INSTALLED HORIZONTALLY AND 0.3m WHERE THE CABLES ARE INSTALLED VERTICALLY) TO SECONDARY CONTROL NETWORK CABLES CN-K820-2 AND CN-K820-4. THE MINIMUM SEPARATION IS NOT REQUIRED WHILE THE CABLES ARE INSIDE CABINETS OR PLINTH.

REFERENCE DRAWINGS	DESCRIPTION
1-0102-ANET-A005	FACILITY FIBRE ALLOCATION
1-0102-ANET-A001	SUPERVISORY, CONTROL AND SERVER NETWORK OVERVIEW
1-0102-ABDG-K001	CONTROL SYSTEM ARCHITECTURE

APEGM Certificate of Authorization
SNC-Lavalin Inc.
No. 4489

NO.	REVISIONS	DATE	DESIGN	CHECK
00	ISSUED FOR CONSTRUCTION – 976-2016	2017/04/05	PC	TMC

CH2MHILL. SNC·LAVALIN KGS GROUP

DESIGNED BY: P. CHICATUN	CHECKED BY: T. CHURCH
DRAWN BY: M. WANG	APPROVED BY: E. RYCZKOWSKI
SCALE: NTS	ISSUED FOR CONSTRUCTION BY: J. SHUMKA
DATE: 2015/01/19	DATE: 2017/04/05
CONSULTANT NO.: 474248	

ENGINEER'S SEAL
PROVINCE OF MANITOBA
P. CHICATUN
Member
30307
REGISTERED PROFESSIONAL ENGINEER
APR 4 2017
REV.00

Winnipeg
THE CITY OF WINNIPEG
WATER AND WASTE DEPARTMENT

SOUTH END WATER POLLUTION CONTROL CENTRE
SEWPCC UPGRADING/EXPANSION PROJECT
AUTOMATION – NETWORK DIAGRAM
HIGH RATE CLARIFICATION BUILDING
CONTROL NETWORK

CITY DRAWING NUMBER	SHEET	REV.	SIZE
1-0102-ANET-K002	001	00	A1

LAST SAVE: 2017/04/01 – 2:08pm
PATH: C:\pw_workdir\ch2mhill_wbg\sh043264\d0356391\1-0102-ANET-K002-001.dwg

PLOT DATE: Apr 01, 2017 – 2:08pm

FILE NAME:1-0102-ANET-K002-001.dwg