A1 SIZE – 594mm x 841mm

DOOR AND HARDWARE SCHEDULE

AREA	LEVEL	DOOR NO.	FROM ROOM NO.	TO ROOM NO.	DOOR DATA: DOOR SIZE	DOOR DATA: ULC LABEL (MINUTES)	DOOR DATA: DOOR TYPE	DOOR DATA: MATERIAL	DOOR DATA: FINISH	DOOR DATA: GLASS	FRAME DATA: FRAME TYPE (ELEVATION)	FRAME DATA: MATERIAL	FRAME DATA: FINISH	FRAME DATA: FRAME TYPE (SECTION)	HARDWARE DATA: HINGE	LOCKSET	EXIT DEVICE	CLOSER	DOOR STOP	BOLTS	KICKPLATE	THRESHOLD	AUTOMATIC DOOR BOTTOM	WEATHER STRIPPING	ELECTRIC STRIKE / ELECTRIC HINGES	POWER SUPPLY	PULL HANDLE	SECURITY CONTROL SYSTEM	NAMEPLATE	MISCELLANEOUS
HIGH RATE CLARIFICATION BUILDING	BASEMENT	K-101-A	K-B03	K-101	900 x 2150	45	D3	STL	PTD	WG	F1	STL	PTD	1	H1	--	X2	C1	--	--	K1	--	--	--	--	--	--	--	--	
		K-101-B	K-B02	K-101	900 x 2150	45	D3	STL	PTD	WG	F1	STL	PTD	1	H1	--	X2	C1	--	--	K1	--	--	--	--	--	--	--	--	
		K-B02-A	K-B03	K-B02	900 x 2150	45	D4	STL	PTD	WG	F1	STL	PTD	1	H1	L16	X1	C4	S2	--	K1	--	--	--	--	--	--	--	--	
		K-B02-B	K-B02	C-B01	2(950) x 2150	180	D1	STL	PTD	--	F1	STL	PTD	1	H1	--	X5	C4	S1	B1	K1	T1	--	--	--	--	--	--	N1	
		K-B02-C	K-B02	EXST	2(950) x 2150	45	D4	STL	PTD	WG	F1	STL	PTD	1	H1	--	X5	C1	S1	B1	K1	T1	--	--	--	--	--	--	N1	
		K-B03-A	K-B02	K-B03	2(950) x 2150	45	D4	STL	PTD	WG	F1	STL	PTD	1	H1	L5	--	C1	S1	B1	K1	T1	--	--	--	--	--	--	N1	
	GROUND	K-101-C	K-102	K-101	900 x 2150	45	D3	STL	PTD	WG	F1	STL	PTD	1	H1	--	X2	C1	S2	--	K1	--	--	--	--	--	--	--	--	
		K-101-D	K-101	EXTERIOR	900 x 2150	--	D1	STL	PTD	--	F1	STL	PTD	1	H1	L16	X1	C6	--	--	--	T1	A1	W1	--	--	--	--	--	
		K-101-E	K-101	EXTERIOR	900 x 2150	--	D1	STL	PTD	--	F1	STL	PTD	1	H1	L16	X1	C6	--	--	--	T1	A1	W1	--	--	--	--	--	
		K-102-A	K-102	EXTERIOR	2350 X 2750	--	D5	AL	FCTY	--	--	STL	PTD	--	ROLLING METAL DOOR – SEE SPECIFICATIONS													SC	--	
		K-102-C	--	--	AS DETAILED	--	--	STL	FCTY	--	--	STL	PTD	--	HORIZONTAL FIRE SHUTTER – SEE SPECIFICATIONS															DOOR ACTIVATED BY FIRE ALARM/ ACTIVATOR
		K-102-B	K-102	EXST	2(950) x 2550	90	D2	STL	PTD	WG	F1	STL	PTD	1	H4	--	X5	C1	--	B1	K1	--	--	--	--	--	--	--	N1	
		K-102-D	K-102	PLATFORM	900 x 2150	45	D1	STL	PTD	--	F1	STL	PTD	1	H1	L5	--	C4	--	--	K1	T1	A1	W1	--	--	--	--	N1	
		K-102-E	K-110	K-102	900 x 2150	45	D4	STL	PTD	WG	F1	STL	PTD	1	H1	L5	--	C4	--	--	K1	--	--	W2	--	--	--	--	N1	
		K-103-A	K-101	K-103	900 x 2150	45	D4	STL	PTD	WG	F1	STL	PTD	1	H1	--	--	C4	--	--	K1	--	--	W2	--	--	--	--	--	
		K-104-A	K-102	K-104	2750 X 2750	45	D5	STL	FCTY	--	--	STL	PTD	--	ROLLING METAL DOOR – SEE SPECIFICATIONS													--	--	
		K-104-B	K-105	K-104	900 x 2150	45	D4	STL	PTD	WG	F1	STL	PTD	1	H1	L5	--	C1	S2	--	K1	--	--	--	--	--	--	--	N1	
		K-105-A	K-108	K-105	2(950) x 2550	90	D2	STL	PTD	WG	F1	STL	PTD	1	H4	L16	X2	C4	S1	B1	K1	--	--	--	--	--	--	--	N1	
		K-105-B	K-106	K-105	2(950) x 2550	90	D2	STL	PTD	WG	F1	STL	PTD	1	H4	L16	X2	C4	S1	B1	K1	--	--	--	--	--	--	--	N1	
		K-106-A	K-105	K-106	900 x 2150	45	D4	STL	PTD	WG	F1	STL	PTD	1	H4	L5	--	C1	S2	--	K1	--	--	--	--	--	--	--	N1	
		K-109-A	K-105	K-109	2(950) x 2150	90	D1	FRP	--		F1	FRP	--	1	H1	L16	X2	C4	S1	B1	K1	--	--	W2	--	--	--	--	N1	
		K-109-B	K-109	EXTERIOR	900 x 2150	--	D1	FRP	--		F1	FRP	--	1	H1	L16	X1	C6	--	--	K1	T1	A1	W1	--	--	P1	--	--	
	ROOF	K-101-F	K-101	EXTERIOR	900 x 2150	--	D1	STL	PTD	L/TIG	F1	STL	PTD	1	H1	L1	X1	C6	--	--	K1	T1	A1	W1	--	--	P1	--	--	

DOOR TYPES

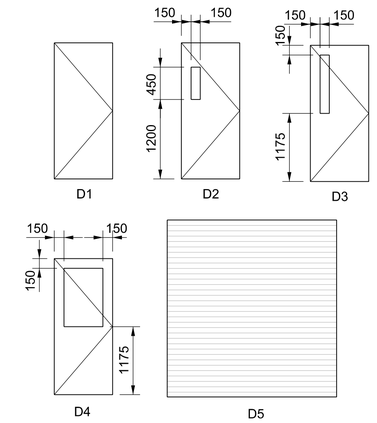

FRAME TYPES – ELEVATION

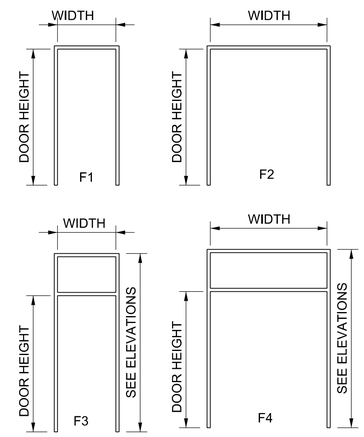

FRAME TYPES – SECTIONS

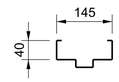

TYPE 1

WINDOW SCHEDULE

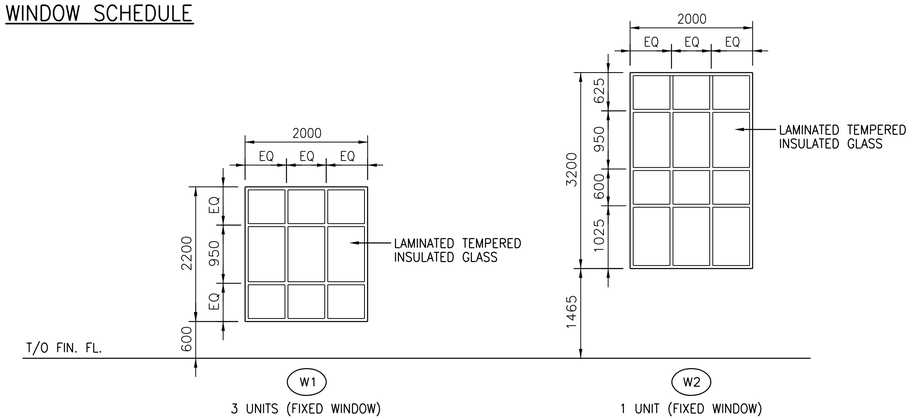

ABBREVIATIONS

AL	ALUMINUM	HM	HOLLOW METAL	RFS	ROLL-UP FIRE SHUTTER
AS	AS SELECTED	IP	INSULATED PANEL	SCI	SECURITY CONTROL ITEMS
CA	CLEAR ANNODIZED	IAP	INSULATED ALUMINUM PANEL	STL	STEEL
CLSR	CLOSER	KEY	KEY GROUP	SST	STAINLESS STEEL
COL	COLOUR	K-PL	KICKPLATE (BOTH SIDES)	TSHD	THRESHOLD
CONSTR	CONSTRUCTION	MATL	MATERIAL	TLS	TO LATER SELECTION
ES	ELECTRIC STRIKE	MET	METAL	WG	WIRED GLASS
FCTY	FACTORY	OHD	OVERHEAD ROLLING DOOR	W-S	WEATHERSTRIPPING
FNSH	FINISH	P-P	PUSH – PULL		
FRP	FIBERGLASS REINFORCED PLASTIC	PTD	PAINTED		
		PS	POWER SUPPLY		

GENERAL NOTES

1. PROVIDE DOOR HARDWARE ON BOTH LEAFS IN PAIRS OF DOORS, UNLESS NOTED OTHERWISE.
2. PROVIDE KICKPLATES ON BOTH SIDES OF DOORS UNLESS NOTED OTHERWISE.
3. ALL EXTERIOR METAL ROLLING DOORS ARE TO BE INSULATED.
4. SEE SPECIFICATION SECTION 08 80 00 FOR TYPES OF GLASS.
5. ELECTRIC STRIKE ,ELECTRIC HINGES & SECURITY CONTROL SYSTEM BY OTHERS.

APEGM
Certificate of Authorization
CH2M HILL Canada Ltd.
No. 1441

NO.	REVISIONS	DATE	DESIGN	CHECK
00	ISSUED FOR CONSTRUCTION – 976-2016	2017/04/05	R.B.	J.C.

CH2MHILL CANADA Architects Inc.
SNC·LAVALIN KGS GROUP

DESIGNED BY: R. ZAKKO	CHECKED BY: B. KOLIS-HUPA
DRAWN BY: R. BATHAN	APPROVED BY: H.T. FRIEHAMMER
SCALE: NTS	ISSUED FOR CONSTRUCTION BY: J. SHUMKA
DATE: 2017/04/05	DATE: 2017/04/05
CONSULTANT NO.: 474248	

ENGINEER'S SEAL
PROVINCE OF MANITOBA
REID ZAKKO
04-05-2017
REGISTERED ARCHITECT

Winnipeg
THE CITY OF WINNIPEG
WATER AND WASTE DEPARTMENT

SOUTH END WATER POLLUTION CONTROL CENTRE
SEWPCC UPGRADING/EXPANSION PROJECT
BUILDING
HIGH RATE CLARIFICATION BUILDING
DOOR, HARDWARE AND WINDOW SCHEDULES

CITY DRAWING NUMBER	SHEET	REV.	SIZE
1-0102-BSCH-K002	001	00	A1

PLOT DATE: 2017\03\30
FILE NAME: 1-0102-BSCH-K002.dgn

©CH2M HILL 2017. ALL RIGHTS RESERVED.