A1 SIZE – 594mm x 841mm

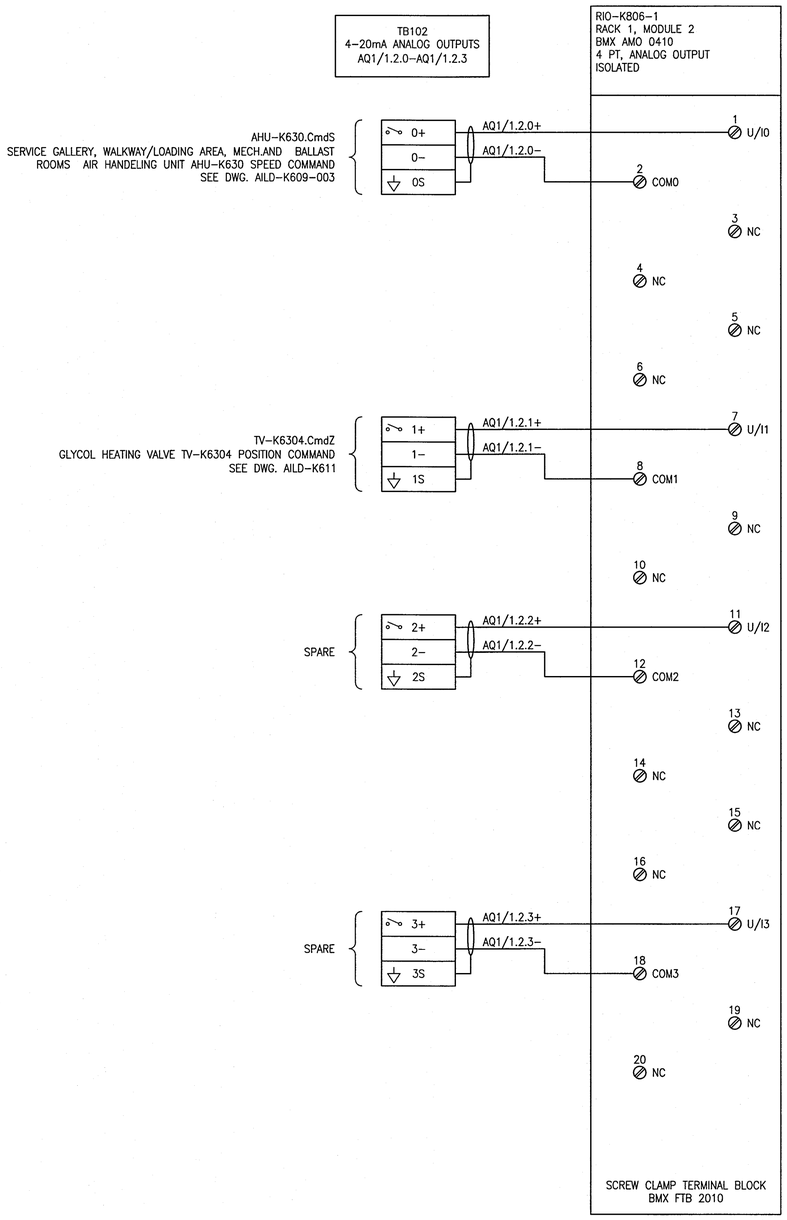

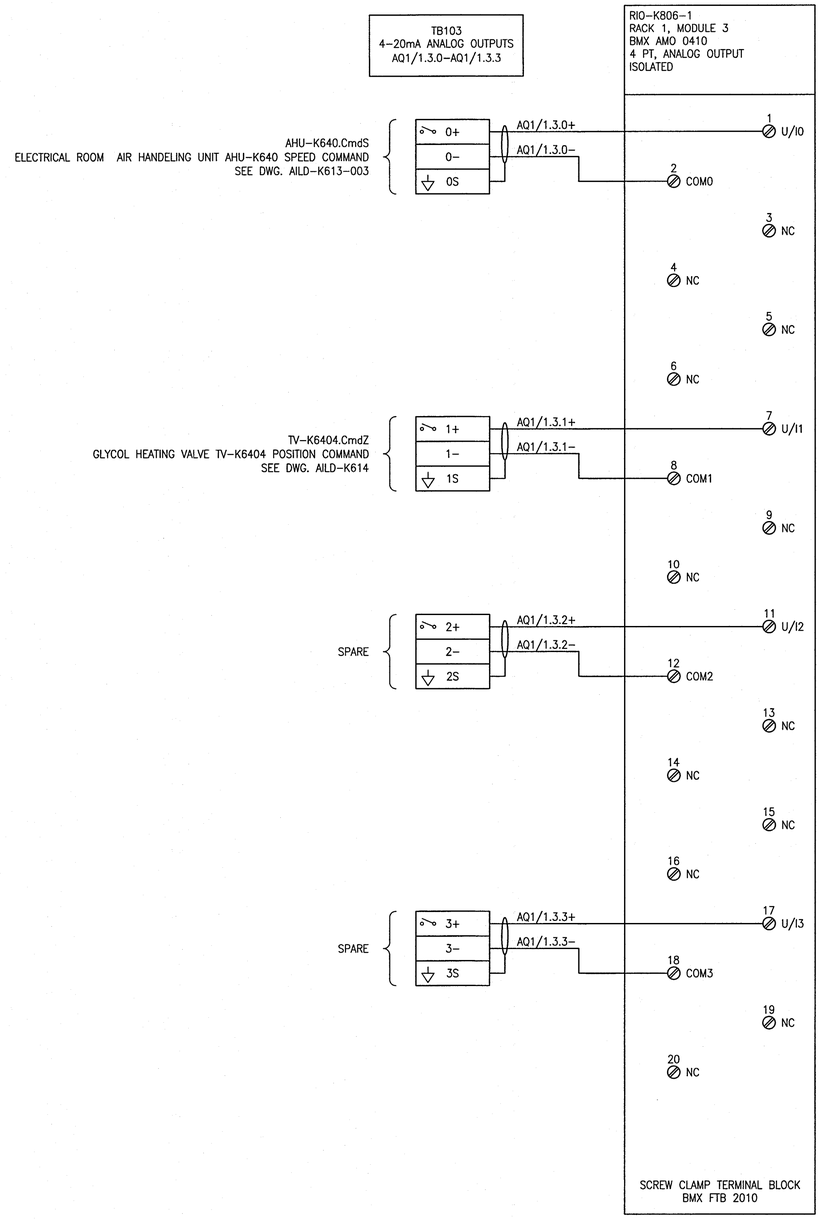

LEGEND:

ISOLATED GROUND

REFERENCE DRAWINGS	DESCRIPTION

APEGM
Certificate of Authorization
SNC-Lavalin Inc.
No. 4489

NO.	REVISIONS	DATE	DESIGN	CHECK
00	ISSUED FOR CONSTRUCTION – 976–2016	2017/04/05	MW	PC

CH2MHILL.
SNC·LAVALIN
KGS GROUP

DESIGNED BY: M. WANG	CHECKED BY: P. CHICATUN
DRAWN BY: M. WANG	APPROVED BY: E. RYCZKOWSKI
SCALE: NTS	ISSUED FOR CONSTRUCTION BY: J. SHUMKA
DATE: 2015/11/09	DATE: 2017/04/05
CONSULTANT NO.: 474248	

ENGINEER'S SEAL
PROVINCE OF MANITOBA
CHICATUN
Member
30307
REGISTERED PROFESSIONAL ENGINEER
APR. 4 2017
REV 00

Winnipeg
THE CITY OF WINNIPEG
WATER AND WASTE DEPARTMENT

SOUTH END WATER POLLUTION CONTROL CENTRE
SEWPCC UPGRADING/EXPANSION PROJECT
AUTOMATION – WIRING DIAGRAM
HIGH RATE CLARIFICATION BUILDING
CP–K826, PLC–K806 – ANALOG OUTPUTS

CITY DRAWING NUMBER	SHEET	REV.	SIZE
1–0102–ACBD–K042	001	00	A1

PLOT DATE: Apr 01, 2017 – 10:26am
FILE NAME:1–0102–ACBD–K042.dwg

LAST SAVE: 2017/04/01 – 10:26am
PATH: C:\pw_workdir\ch2mhill_wbg\shl043264\d0356273\1–0102–ACBD–K042.dwg