A1 SIZE – 594mm x 841mm

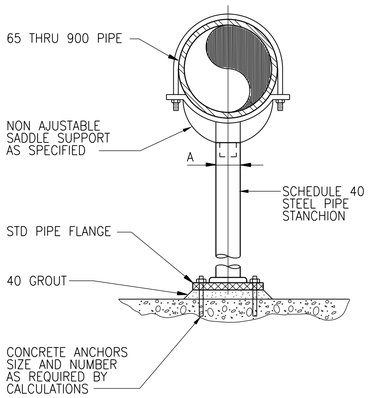

DIMENSION TABLE	
PIPE SIZE	A
65	65
75	65
100	75
150	75
200	75
250	75
300	75
350	75
400	75
500	100
600	100
750	100
900	100

PIPE SUPPORT

NTS

4005-501

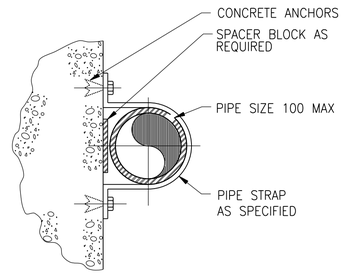

NOTES:

1. FOR VERTICAL PIPES ONLY.
2. PROVIDE PIPE PROTECTION BARRIER AS SPECIFIED. FABRICATE OVERSIZE STRAP WHERE REQUIRED.

PIPE SUPPORT – WALL MOUNT

NTS

4005-503

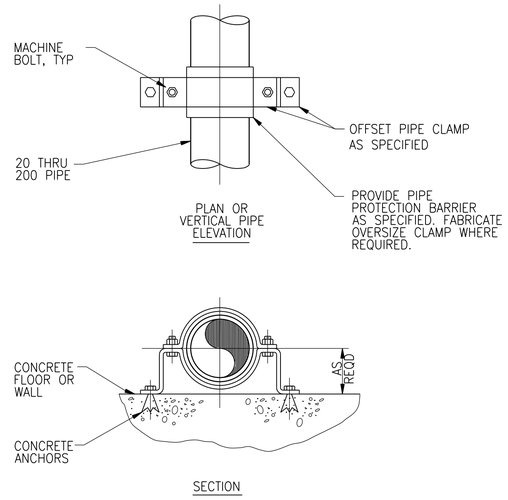

PIPE SUPPORT – WALL MOUNT

NTS

4005-505

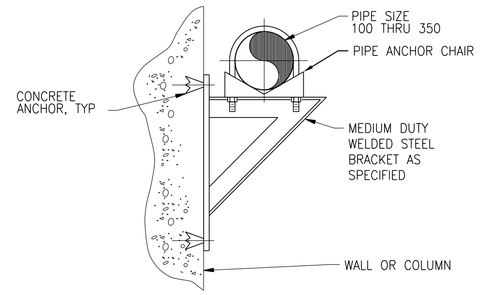

NOTES:

1. WALL BRACKET SHALL BE MEDIUM OR HEAVY DUTY DEPENDING ON PIPE LOAD REQUIREMENTS.

PIPE SUPPORT – WALL MOUNTED MEDIUM

NTS

4005-508

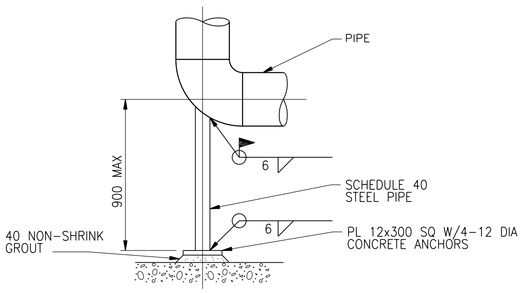

PIPE DIAMETER	SUPPORT DIAMETER	PLATE THICKNESS	ANCHOR BOLT DIAMETER
75	65	10	10
100 THRU 300	75	10	12
350 AND 400	100	10	12
450 AND 500	150	12	16

PIPE SUPPORT

NTS

4005-516

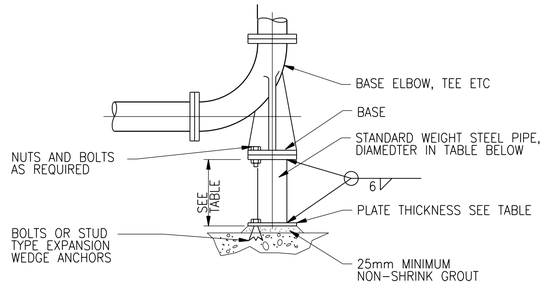

DIMENSION TABLE				
PIPE SIZE	SUPPORT DIAMETER	PLATE		ANCHOR BOLT DIAMETER
		DIAMETER	THICKNESS	
75	40	125	10	10
100	50	150	10	10
150	75	175	10	10
200 and 250	100	225	12	12
300 thru 400	150	275	12	12
450 thru 600	200	350	16	16
750	250	400	16	16
900	300	475	16	16
1050	400	600	20	20
1200	450	625	20	20
1350	500	750	20	20 (USE 6)
1500	600	800	20	20 (USE 6)

NOTES:

1. ALSO USE FOR SUPPORT OF HORIZONTAL TEE OR CROSS.

BASE BEND

NTS

4005-518

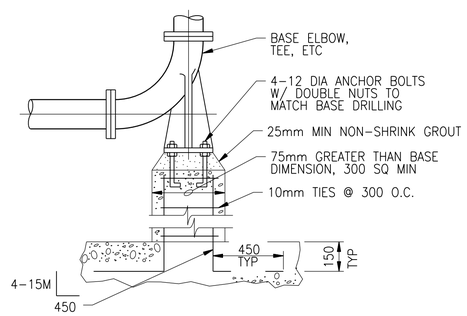

NOTES:

1. ALSO USE FOR SUPPORT OF HORIZONTAL TEE OR CROSS.

BASE BEND

NTS

4005-518A

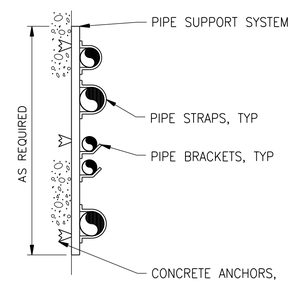

NOTES:

1. PROVIDE PIPE PROTECTION BARRIER AS SPECIFIED.

PIPE SUPPORT – MULTIPLE WALL MOUNT

NTS

4005-521

APEGM
Certificate of Authorization
CH2M HILL Canada Ltd.
No. 1441

NO.	REVISIONS	DATE	DESIGN	CHECK
00	ISSUED FOR CONSTRUCTION – 976-2016	2017/04/05	B.C.	J.C.

CH2MHILL. SNC·LAVALIN KGS GROUP

DESIGNED BY: F. ABSI	CHECKED BY: B. EDGAR
DRAWN BY: B. COOPER	APPROVED BY: H.T. FREIHAMMER
SCALE: NTS	ISSUED FOR CONSTRUCTION BY: J. SHUMKA
DATE: 2017/04/05	DATE: 2017/04/05
CONSULTANT NO.: 474248	

ENGINEER'S SEAL
PROVINCE OF MANITOBA
April 5, 2017
F. J. ABSI
Member 36075
REGISTERED PROFESSIONAL ENGINEER
F. J. Absi

Winnipeg
THE CITY OF WINNIPEG
WATER AND WASTE DEPARTMENT

SOUTH END WATER POLLUTION CONTROL CENTRE
SEWPCC UPGRADING/EXPANSION PROJECT
PROCESS
STANDARD DETAILS (1)

CITY DRAWING NUMBER	SHEET	REV.	SIZE
1-0102-PDTL-A002	001	00	A1

PLOT DATE: 2017\03\29

FILE NAME: 1-0102-PDTL-A002.dgn

©CH2M HILL 2017. ALL RIGHTS RESERVED.