B SIZE - 279mm x 432mm

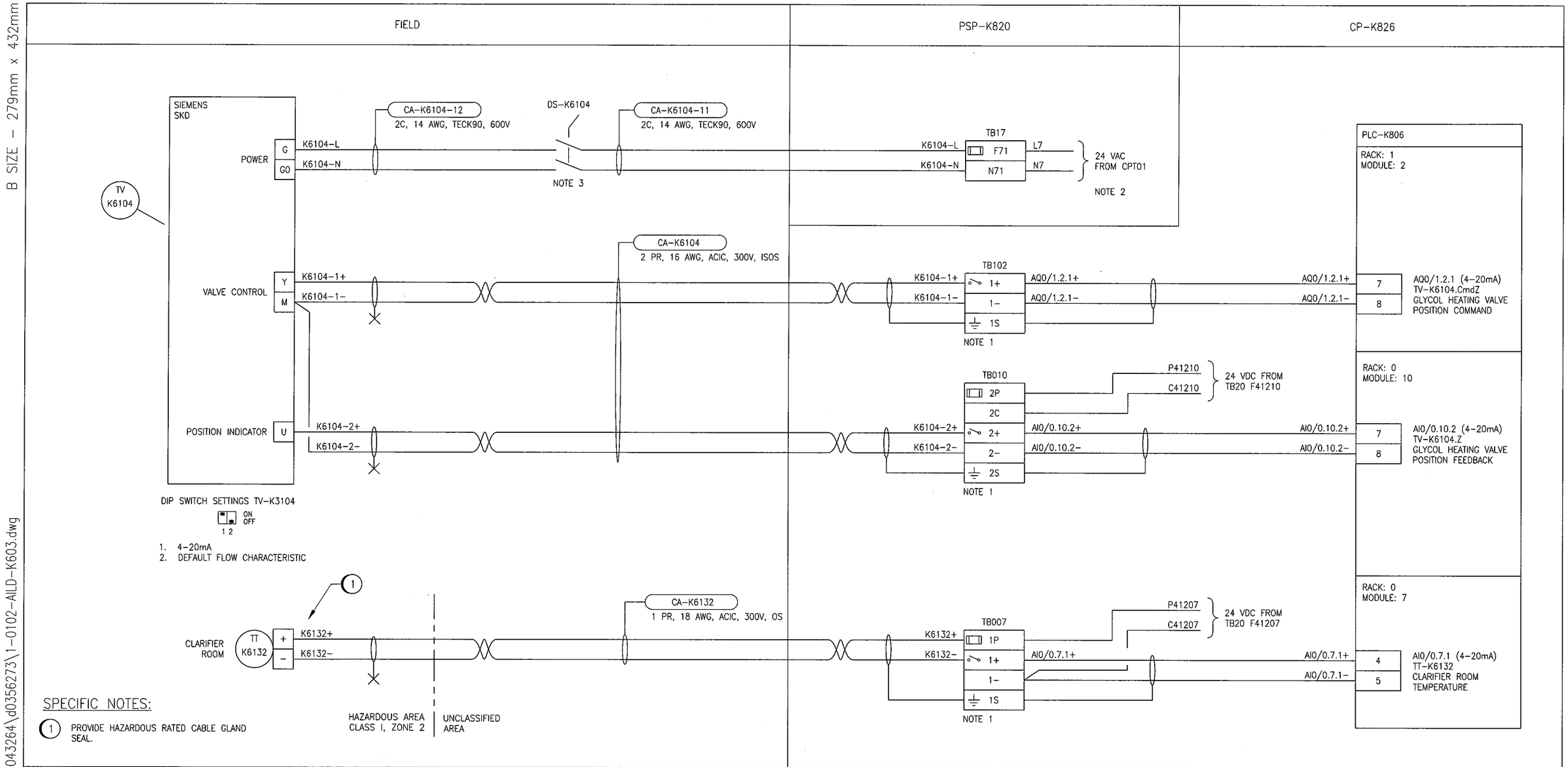

SPECIFIC NOTES:

(1) PROVIDE HAZARDOUS RATED CABLE GLAND SEAL.

NOTES

1. GROUNDED TERMINALS CONNECTED TO ISOLATED GROUND THROUGH DIN RAIL.
2. 24 VAC CLASS 2 POWER SUPPLY FROM PSP-K820.
3. PROVIDE SQUARE D TYPE K 2 POLE DISCONNECT SWITCH.

APEGM Certificate of Authorization
SNC-Lavalin Inc.
No. 4489

NO.	REVISIONS	DATE	DESIGN	CHECK
00	ISSUED FOR CONSTRUCTION - 976-2016	2017/04/05	SSB	TMC

SNC·LAVALIN CH2MHILL KGS GROUP CONSULTING ENGINEERS

DESIGNED BY: S. BOGHOSIAN	CHECKED BY: T. CHURCH
DRAWN BY: S. BOGHOSIAN	APPROVED BY: E. RYCZKOWSKI
SCALE: NTS	DATE: 2015/03/03
ISSUED FOR CONSTRUCTION BY: J. SHUMKA	DATE: 2017/04/05
CONSULTANT NO.: 474248	

ENGINEER'S SEAL
PROVINCE OF MANITOBA
T. M. CHURCH
Member
32682
REGISTERED PROFESSIONAL ENGINEER
Apr. 5, 2017

Winnipeg
THE CITY OF WINNIPEG
WATER AND WASTE DEPARTMENT

SOUTH END WATER POLLUTION CONTROL CENTRE
SEWPCC UPGRADING/EXPANSION PROJECT
AUTOMATION - LOOP DIAGRAM
TV-K6104 AND TT-K6132
AHU-K610 TEMP VALVE AND CLAFIRIER ROOM TEMP TRANSMITTER

CITY DRAWING NUMBER	SHEET	REV.	SIZE
1-0102-AILD-K603	001	00	B

LAST SAVE: 2017/04/01 - 10:44am
PATH: C:\pw_workdir\ch2mhill_wbg\sh043264\d0356273\1-0102-AILD-K603.dwg

PLOT DATE: Apr 01, 2017 - 10:44am

FILE NAME: 1-0102-AILD-K603.dwg