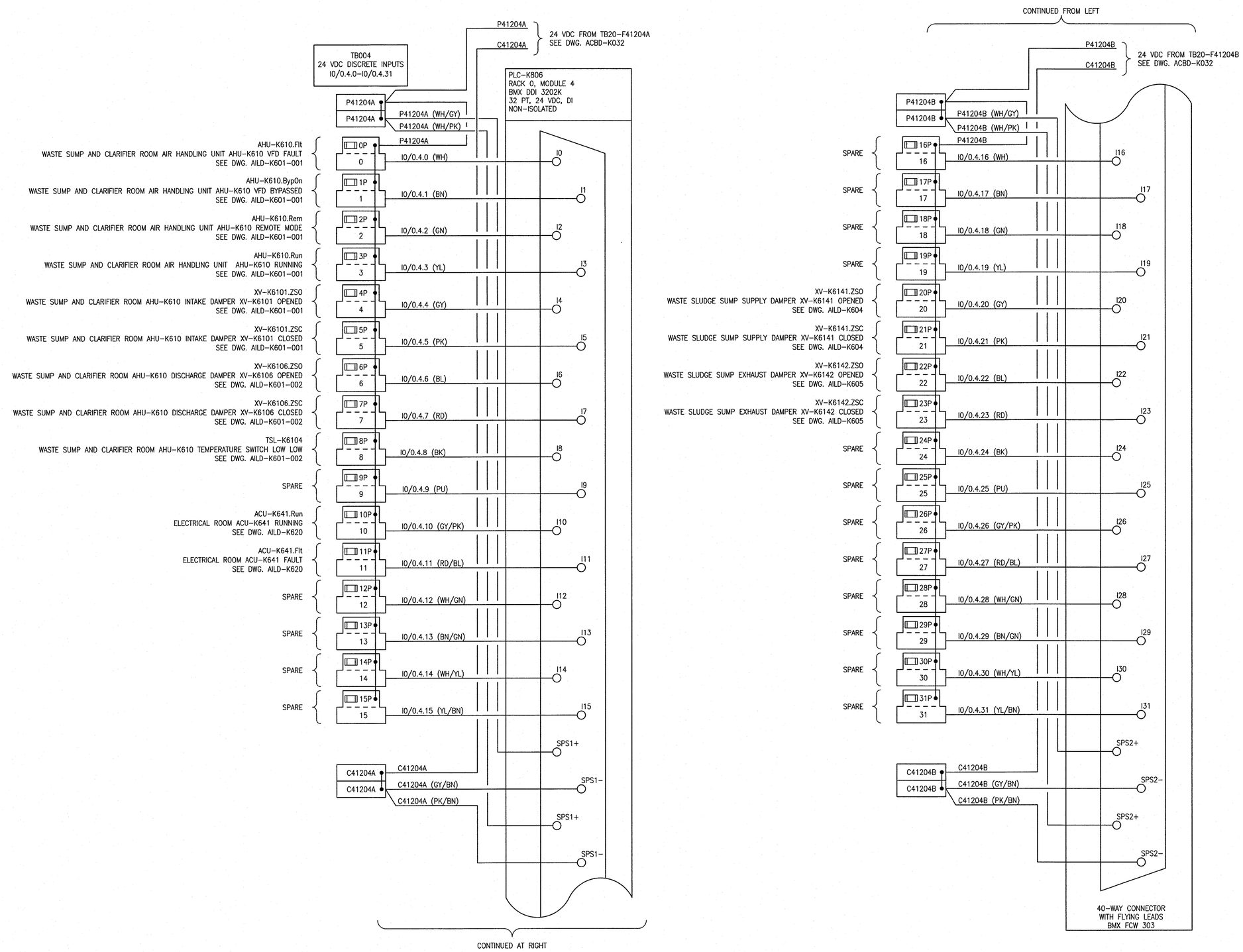

FUSE SCHEDULE

TB	IDENTIFIER	SIZE	RATED CURRENT (A) FA
TB004	0P	5x20mm	0.1
	1P	5x20mm	0.1
	2P	5x20mm	0.1
	3P	5x20mm	0.1
	4P	5x20mm	0.1
	5P	5x20mm	0.1
	6P	5x20mm	0.1
	7P	5x20mm	0.1
	8P	5x20mm	0.1
	9P	5x20mm	0.1
	10P	5x20mm	0.1
	11P	5x20mm	0.1
	12P	5x20mm	0.1
	13P	5x20mm	0.1
	14P	5x20mm	0.1
	15P	5x20mm	0.1
	16P	5x20mm	0.1
	17P	5x20mm	0.1
	18P	5x20mm	0.1
	19P	5x20mm	0.1
	20P	5x20mm	0.1
	21P	5x20mm	0.1
	22P	5x20mm	0.1
	23P	5x20mm	0.1
	24P	5x20mm	0.1
	25P	5x20mm	0.1
	26P	5x20mm	0.1
	27P	5x20mm	0.1
	28P	5x20mm	0.1
	29P	5x20mm	0.1
	30P	5x20mm	0.1
	31P	5x20mm	0.1

REFERENCE DRAWINGS	DESCRIPTION
–	–

APEGM Certificate of Authorization
SNC-Lavalin Inc.
No. 4489

NO.	REVISIONS	DATE	DESIGN	CHECK
00	ISSUED FOR CONSTRUCTION – 976–2016	2017/04/05	MW	PC

CH2MHILL. SNC·LAVALIN KGS GROUP

DESIGNED BY: M. WANG
CHECKED BY: P. CHICATUN
DRAWN BY: M. WANG
APPROVED BY: E. RYCZKOWSKI
SCALE: NTS
ISSUED FOR CONSTRUCTION BY: J. SHUMKA
DATE: 2015/10/01
DATE: 2017/04/05
CONSULTANT NO.: 474248

ENGINEER'S SEAL
PROVINCE OF MANITOBA
P.E. CHICATUN
Member 30307
REGISTERED PROFESSIONAL ENGINEER
APR. 11, 2017
REV. 00

Winnipeg
THE CITY OF WINNIPEG
WATER AND WASTE DEPARTMENT

SOUTH END WATER POLLUTION CONTROL CENTRE
SEWPCC UPGRADING/EXPANSION PROJECT
AUTOMATION – WIRING DIAGRAM
HIGH RATE CLARIFICATION BUILDING
CP–K826, PLC–K806 – DISCRETE INPUTS

CITY DRAWING NUMBER	SHEET	REV.	SIZE
1–0102–ACBD–K033	001	00	A1

A1 SIZE – 594mm x 841mm

LAST SAVE: 2017/04/01 – 10:25am
PATH: C:\pw_workdir\ch2mhill_wbg\sh043264\d356273\1–0102–ACBD–K033–001.dwg

PLOT DATE: Apr 01, 2017 – 10:25am
FILE NAME:1–0102–ACBD–K033–001.dwg