B SIZE - 279mm x 432mm

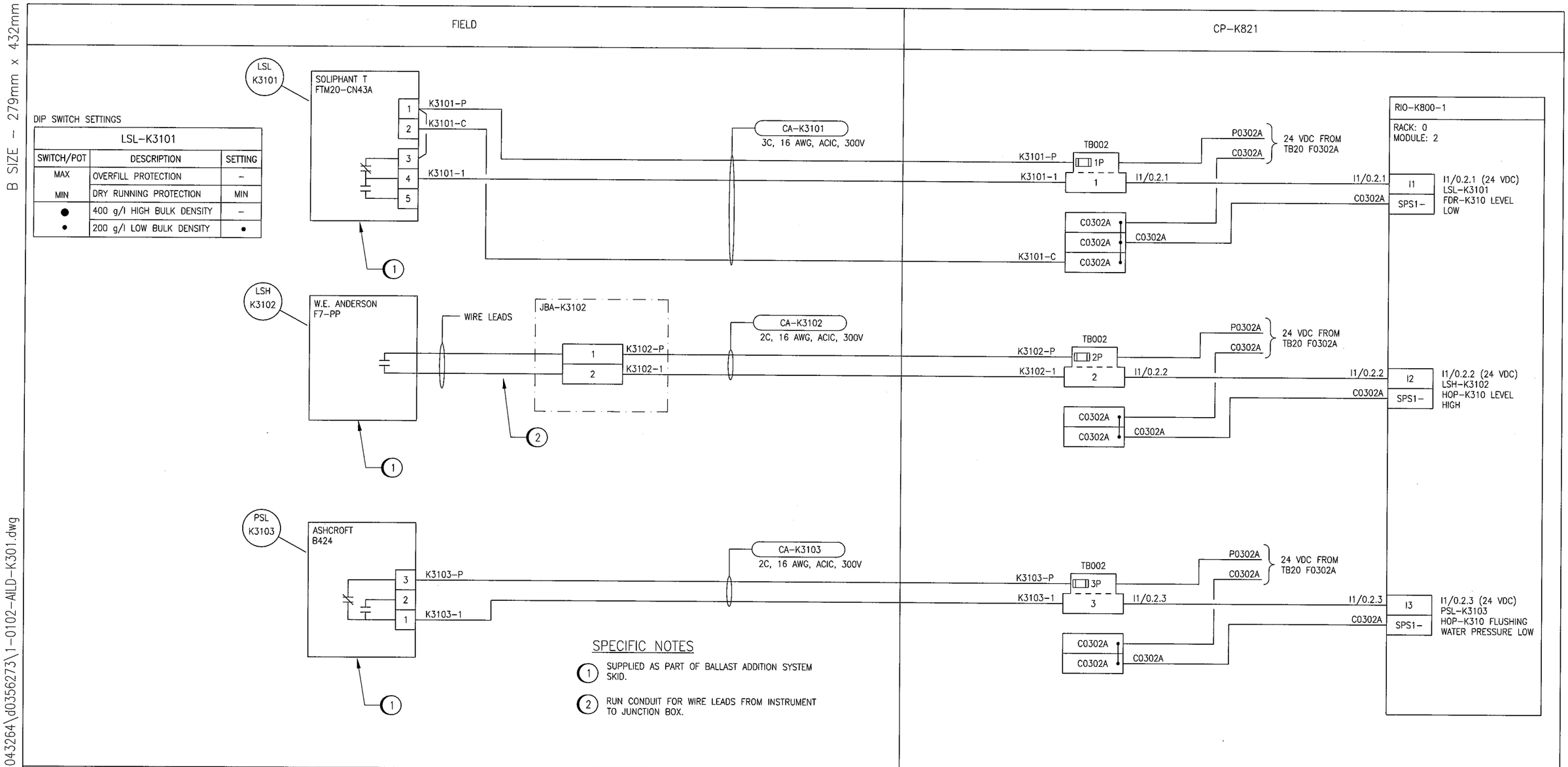

DIP SWITCH SETTINGS

LSL-K3101		
SWITCH/POT	DESCRIPTION	SETTING
MAX	OVERFILL PROTECTION	–
MIN	DRY RUNNING PROTECTION	MIN
●	400 g/l HIGH BULK DENSITY	–
•	200 g/l LOW BULK DENSITY	•

SPECIFIC NOTES

1. SUPPLIED AS PART OF BALLAST ADDITION SYSTEM SKID.
2. RUN CONDUIT FOR WIRE LEADS FROM INSTRUMENT TO JUNCTION BOX.

SNC·LAVALIN CH2MHILL KGS GROUP CONSULTING ENGINEERS

NO.	REVISIONS	DATE	DESIGN	CHECK
00	ISSUED FOR CONSTRUCTION - 976-2016	2017/04/05	SSB	TMC

DESIGNED BY: S. BOGHOSIAN	CHECKED BY: T. CHURCH
DRAWN BY: S. BOGHOSIAN	APPROVED BY: E. RYCZKOWSKI
SCALE: NTS	DATE: 2015/05/29
ISSUED FOR CONSTRUCTION BY: J. SHUMKA	DATE: 2017/04/05
CONSULTANT NO.: 474248	

APEGM Certificate of Authorization SNC-Lavalin Inc. No. 4489

ENGINEER'S SEAL: PROVINCE OF MANITOBA — T. M. CHURCH Member 32682 — REGISTERED PROFESSIONAL ENGINEER — Apr. 3, 2017

Winnipeg — THE CITY OF WINNIPEG — WATER AND WASTE DEPARTMENT

SOUTH END WATER POLLUTION CONTROL CENTRE
SEWPCC UPGRADING/EXPANSION PROJECT
AUTOMATION - LOOP DIAGRAM
LSL-K3101, LSH-K3102 AND PSL-K3103
BALLAST ADDITION SYSTEM SWITCHES

CITY DRAWING NUMBER	SHEET	REV.	SIZE
1-0102-AILD-K301	001	00	B

LAST SAVE: 2017/04/01 - 10:43am
PATH: C:\pw_workdir\ch2mhill_wbg\sh043264\d0356273\1-0102-AILD-K301.dwg

PLOT DATE: Apr 01, 2017 - 10:43am

FILE NAME: 1-0102-AILD-K301.dwg