A1 SIZE – 594mm x 841mm

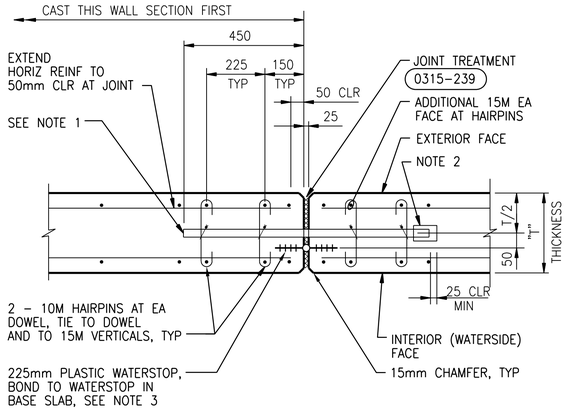

PLAN

NOTES:

1. 25mm DIA x 900mm SMOOTH COATED BAR DOWELS. LOCATE AT 300mm MAX FROM TOP AND 600mm FROM BOTTOM OF WALL AND AT 600mm MAX SPACING. ALIGN AND TIE-IN-PLACE TO REINF. COATING SHALL CONSIST OF A CORROSION RESISTANT COATING PLUS A LUBRICANT COATING AS SPECIFIED.
2. 25mm ID x 50mm PLASTIC CAP WITH 25mm POLYSTYRENE BETWEEN END OF DOWEL AND END CAP. TAPE TO BAR FOR WATERTIGHT SEAL.
3. BEND VERTICAL JOINT WATERSTOP OVER TO CENTERLINE OF WALL IN BOTTOM 600mm OF WALL, AND SPLICE TO WATERSTOP IN WALL BASE CONSTRUCTION JOINT. SEE 0315-012

SLAB/WALL VERTICAL EXPANSION JOINT

NTS

0315-232

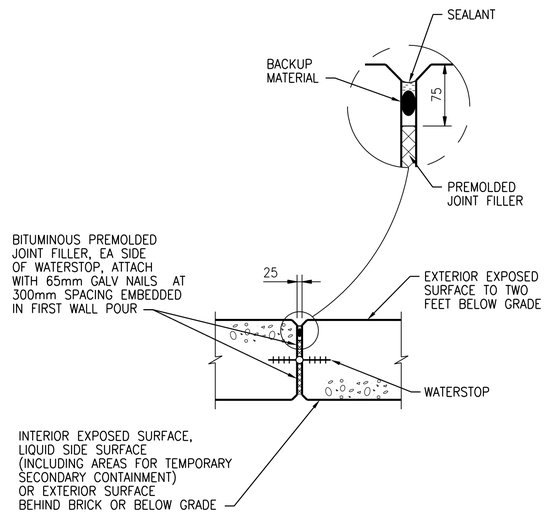

PLAN

WALL EXPANSION JOINT TREATMENT

NTS

0315-239

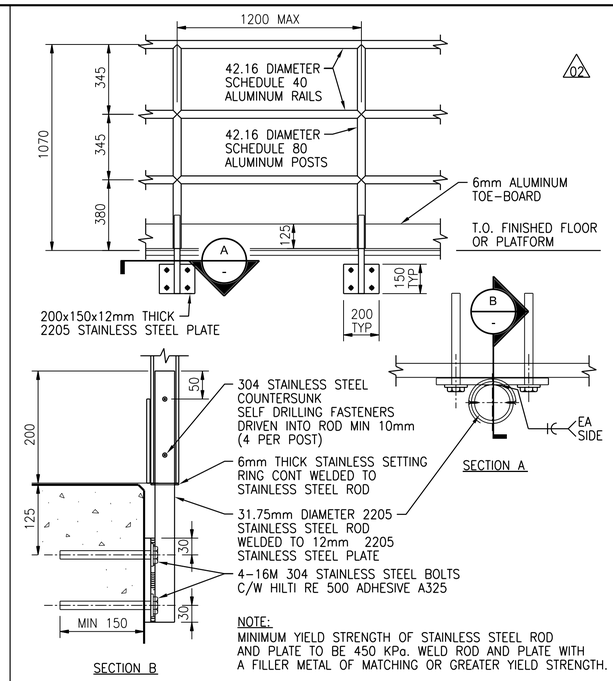

SECTION B

NOTE:
MINIMUM YIELD STRENGTH OF STAINLESS STEEL ROD AND PLATE TO BE 450 KPa. WELD ROD AND PLATE WITH A FILLER METAL OF MATCHING OR GREATER YIELD STRENGTH.

SIDE MOUNTED GUARD ON CONCRETE

NTS

0552-817

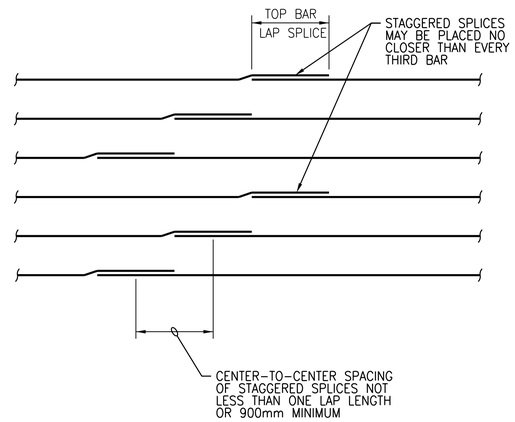

NOTE:

1. VERTICAL BARS NOT SHOWN FOR CLARITY.
2. SPLICES AT EACH FACE OF WALL MAY OCCUR AT SAME LOCATION.

CIRCULAR TANK HORIZONTAL WALL REINFORCING STAGGERED SPLICES

NTS

0330-824

©CH2M HILL 2017. ALL RIGHTS RESERVED.

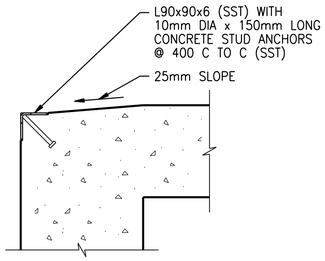

SECTION

CONCRETE EDGE PROTECTOR

NTS

0330-807

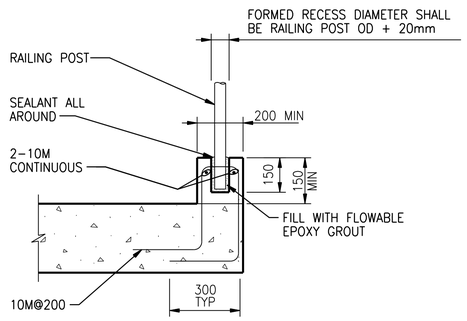

SECTION

RAILING POST SET IN CURB

NTS

0330-809

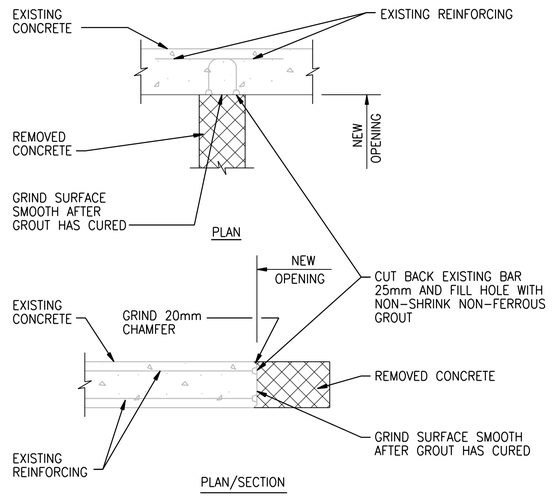

PLAN/SECTION

NEW OPENINGS IN EXISTING WALLS AND SLABS

NTS

0330-817

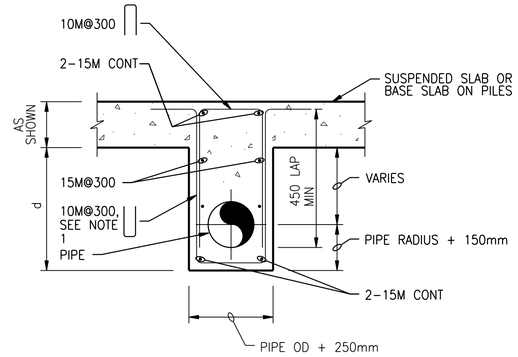

SECTION

NOTES:

1. IF d<600 BEND BOTTOM U-BARS TO FORM 15M@300 HORIZONTAL IN ONE LAYER DELETE TOP U-BAR.
2. IF d>600 DETAIL AS SHOWN WITH U-BARS ON TOP AND BOTTOM.

REINFORCED CONCRETE PIPE ENCASEMENT

NTS

0330-820

APEGM
Certificate of Authorization
CH2M HILL Canada Ltd.
No. 1441

NO.	REVISIONS	DATE	DESIGN	CHECK
03	ISSUED FOR CONSTRUCTION – 976-2016	2017/04/05	G.O	J.C.
02	ISSUED FOR CCN 7 – B.O. 899-2015	06/2016	G.O	J.C.
01	ISSUED FOR CONSTR – B.O. 899-2015	04/2016	G.O.	J.C.
00	ISSUED FOR TENDER – B.O. 899-2015	01/2016	G.O.	J.C.

CH2MHILL. KGS GROUP CONSULTING ENGINEERS SNC·LAVALIN

DESIGNED BY: J. THANNICKAL
CHECKED BY: E. LUI
DRAWN BY: G.OMORI
APPROVED BY: H.T. FREIHAMMER
SCALE: NTS
ISSUED FOR CONSTRUCTION BY: J. SHUMKA DATE: 2017/04/05
DATE: 2017/04/05
CONSULTANT NO.: 474248

ENGINEER'S SEAL
APR 5, 2017
PROVINCE OF MANITOBA
LUI
Member
37003
REGISTERED PROFESSIONAL ENGINEER

Winnipeg
THE CITY OF WINNIPEG
WATER AND WASTE DEPARTMENT

SOUTH END WATER POLLUTION CONTROL CENTRE
SEWPCC UPGRADING/EXPANSION PROJECT
STRUCTURAL
STANDARD DETAILS (13)

CITY DRAWING NUMBER	SHEET	REV.	SIZE
1-0102-SDTL-A014		03	A1

PLOT DATE: 2017\03\29
FILE NAME: 1-0102-SDTL-A014.dgn