A1 SIZE – 594mm x 841mm

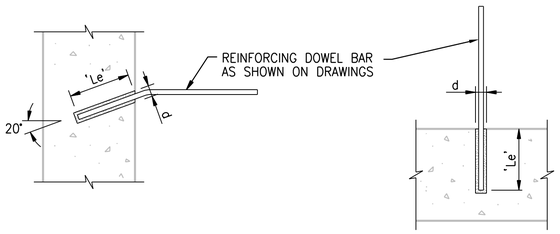

FOR HORIZONTAL BARS

FOR VERTICAL BARS

HYDRAULIC CEMENT GROUT	EPOXY GROUT
d = BAR DIA + 20mm Le : 15M – 200mm 20M – 250mm 25M – 300mm	d AND Le IN ACCORDANCE WITH MANUFACTURER'S PRINTED INSTRUCTIONS.

NOTES:

1. DRILL HOLE OF DIAMETER AND DEPTH AS REQUIRED.
2. CLEAN HOLE OF DUST AND DEBRIS.
3. FILL HOLE WITH DOWELLING GROUT.
4. INSTALL REINFORCING DOWEL BAR AND WIPE AWAY OVERFLOW.
5. SECURE DOWEL BAR FIRMLY IN POSITION AND DO NOT DISTURB BAR FOR 24 HOURS AFTER INSTALLATION.

DOWELLING IN EXISTING CONCRETE

NTS

0330-816

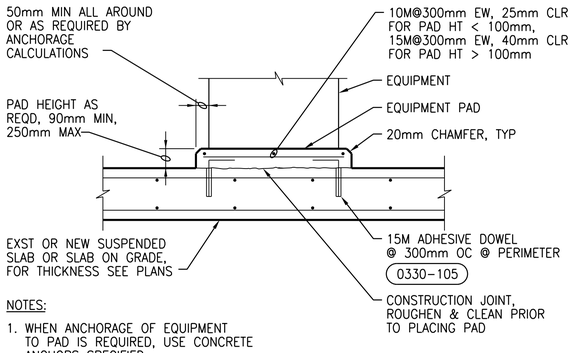

NOTES:

1. WHEN ANCHORAGE OF EQUIPMENT TO PAD IS REQUIRED, USE CONCRETE ANCHORS SPECIFIED.
2. CONCRETE PADS FOR ELECTRICAL EQUIPMENT SHALL BE 90mm HIGH, UNLESS NOTED OTHERWISE.

TYPE E

GENERAL NOTE:
FOR GENERAL NOTES SEE DETAIL 3 OF 3.

CONCRETE EQUIPMENT PAD – TYPE E

NTS

DETAIL 1 OF 3

0330-056

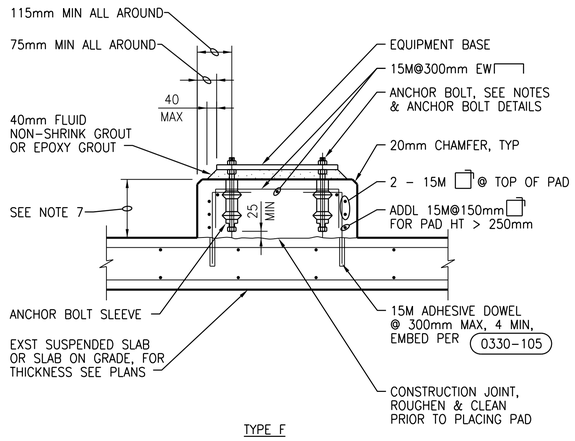

TYPE F

GENERAL NOTE:
FOR GENERAL NOTES SEE DETAIL 3 OF 3.

CONCRETE EQUIPMENT PAD – TYPE F

NTS

DETAIL 2 OF 3

0330-056

NOTES:

1. PAD SIZE SHALL BE MINIMUM INDICATED OR AS SHOWN ON THE PLANS OR AS INDICATED BY THE MANUFACTURER AND APPROVED BY THE CONTRACT ADMINISTRATOR.
2. THE SIZE, NUMBER, TYPE, LOCATION, AND THREAD PROJECTION OF THE ANCHOR BOLTS SHALL BE DETERMINED BY THE EQUIPMENT MANUFACTURER AND AS APPROVED BY THE ENGINEER. ANCHOR BOLTS SHALL BE HELD IN POSITION WITH A TEMPLATE OR OTHER ACCEPTABLE MEANS, MATCHING THE BASE PLATE, WHILE PAD IS BEING PLACED.
3. ANCHOR BOLT SLEEVES SHALL BE USED TO PROVIDE MINIMUM ANCHOR BOLT MOVEMENT OF 13mm IN ALL HORIZONTAL DIRECTIONS. THE MINIMUM SLEEVE LENGTH SHALL BE 8 TIMES THE BOLT DIAMETER.
4. ANCHOR BOLT SLEEVES SHALL HAVE A MINIMUM INTERNAL DIAMETER 25mm GREATER THAN BOLT DIAMETER AND A MAXIMUM INTERNAL DIAMETER 75mm GREATER THAN ANCHOR BOLT DIAMETER. SLEEVES SHALL BE FILLED WITH NON-SHRINK GROUT AFTER BOLTS ARE ALIGNED. SEE 0330-057 .
5. EQUIPMENT BASES SHALL BE INSTALLED LEVEL UNLESS INDICATED OTHERWISE.
6. WEDGES, SHIMS, OR LEVELING NUTS SHALL BE USED TO SUPPORT THE BASE WHILE THE GROUT IS PLACED. WEDGES OR SHIMS SHALL BE REMOVED AFTER GROUT IS SET AND PACK VOID WITH GROUT.
7. HEIGHT OF PADS SHALL BE MINIMUM REQUIRED FOR ANCHOR BOLT CLEARANCE TO KEEP ANCHOR BOLT ABOVE SUPPORTING SLAB (SEE TABLE BELOW). WHERE EQUIPMENT OR PIPING ELEVATION REQUIRE A PAD HEIGHT LESS THAN THE MINIMUM SHOWN, USE TYPE "B" EQUIPMENT PAD WITH BLOCKOUT.
8. AT CONTRACTOR'S OPTION, CONCRETE ANCHORS MAY BE USED IN LIEU OF CAST-IN-PLACE ANCHOR BOLTS FOR EQUIPMENT ANCHOR BOLTS LESS THAN 20mm DIAMETER WHEN APPROVED BY THE EQUIPMENT MANUFACTURER AND APPROVED BY THE CONTRACT ADMINISTRATOR. ANCHORS SHALL BE INSTALLED WITH 100mm MINIMUM EDGE DISTANCE IN EACH DIRECTION.

AB DIA (mm)	12	16	20	22	25	33	35	38	44	50
MIN PAD HT (mm)	175	215	250	275	320	380	420	450	535	600

CONCRETE EQUIPMENT PAD – NOTES

NTS

DETAIL 3 OF 3

0330-056

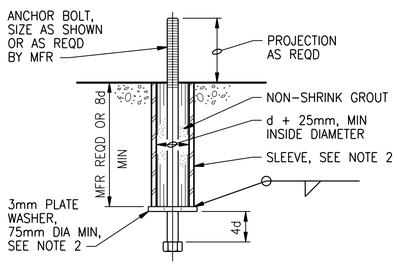

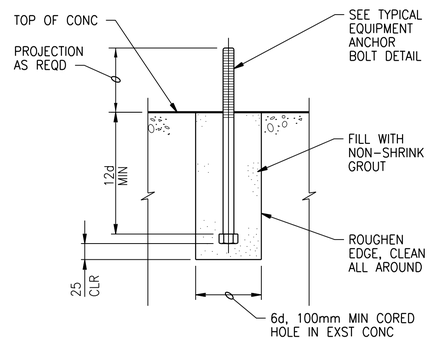

ANCHOR BOLT RETROFIT

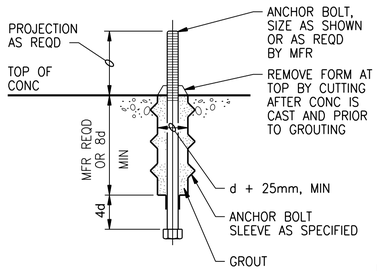

MACHINERY ANCHOR BOLT DETAIL

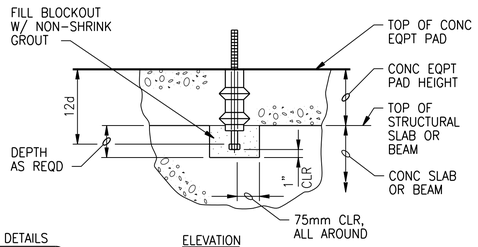

ELEVATION

ANCHOR BOLT BLOCKOUT

NOTES:

1. FOR CONCRETE EQUIPMENT PAD DETAILS AND NOTES NOT SHOWN SEE 0330-056
2. MATERIAL TO MATCH BOLT.

ANCHOR BOLT DETAILS

NTS

0330-057

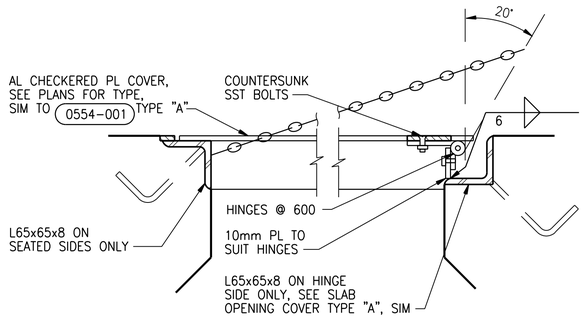

NOTES:

1. INSTALL SST CHAIN. TACK WELD OR BOLT TO PLATE AND FRAME. CHAIN TO STOP PLATE AT 20° PAST VERTICAL.
2. HINGES TO BE STAINLESS STEEL FULL MORTISE BUTT HINGES WITH STAINLESS STEEL BOLTS.
3. MAX WEIGHT TO BE 35 kg.
4. SEE LIFTING EYE DETAILS AND PLANS FOR TYPE.

CHECKERED ALUMINUM HINGED FLOOR PLATE

NTS

0554-003

©CH2M HILL 2017. ALL RIGHTS RESERVED.

APEGM
Certificate of Authorization
CH2M HILL Canada Ltd.
No. 1441

NO.	REVISIONS	DATE	DESIGN	CHECK
02	ISSUED FOR CONSTRUCTION – 976-2016	2017/04/05	G.O.	J.C.
01	ISSUED FOR CONSTRUCTION	10/2015	G.O.	J.C.
00	ISSUED FOR TENDER	08/2015	G.O.	J.C.

CH2MHILL. KGS GROUP SNC·LAVALIN

DESIGNED BY: J. THANNICKAL
CHECKED BY: E. LUI
DRAWN BY: G.OMORI
APPROVED BY: H.T. FREIHAMMER
SCALE: NTS
ISSUED FOR CONSTRUCTION BY: J. SHUMKA
DATE: 2017/04/05
DATE: 2017/04/05
CONSULTANT NO.: 474248

ENGINEER'S SEAL
APR 5, 2017
PROVINCE OF MANITOBA
LUI
Member
37003
REGISTERED PROFESSIONAL ENGINEER

THE CITY OF WINNIPEG
WATER AND WASTE DEPARTMENT

SOUTH END WATER POLLUTION CONTROL CENTRE
SEWPCC UPGRADING/EXPANSION PROJECT
STRUCTURAL
STANDARD DETAILS (7)

CITY DRAWING NUMBER	SHEET	REV.	SIZE
1-0102-SDTL-A008		02	A1

PLOT DATE: 2017\03\29

FILE NAME: 1-0102-SDTL-A008.dgn