A1 SIZE – 594mm x 841mm

ELEMENTARY DIAGRAM:

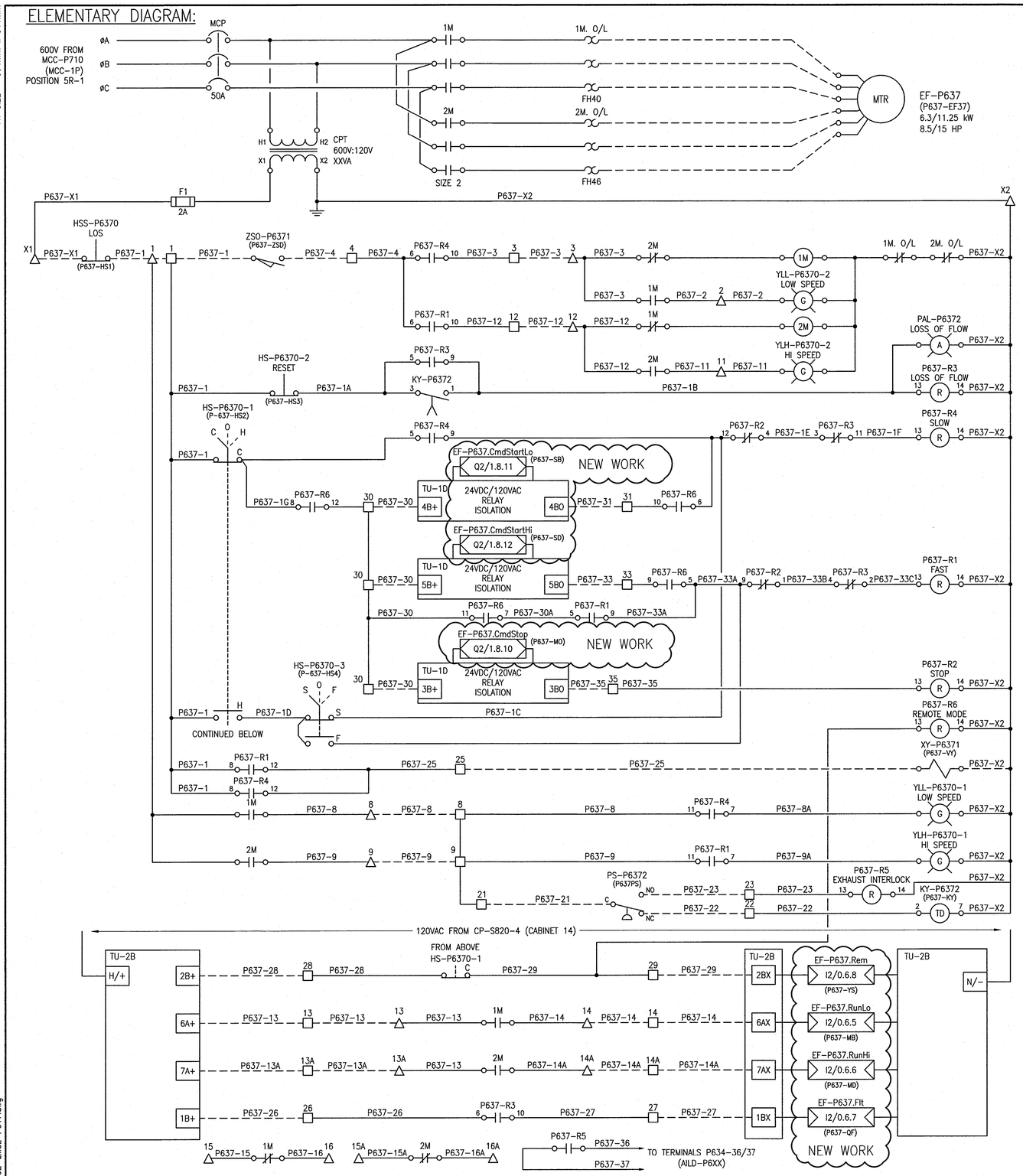

FIELD CONNECTION DIAGRAM:

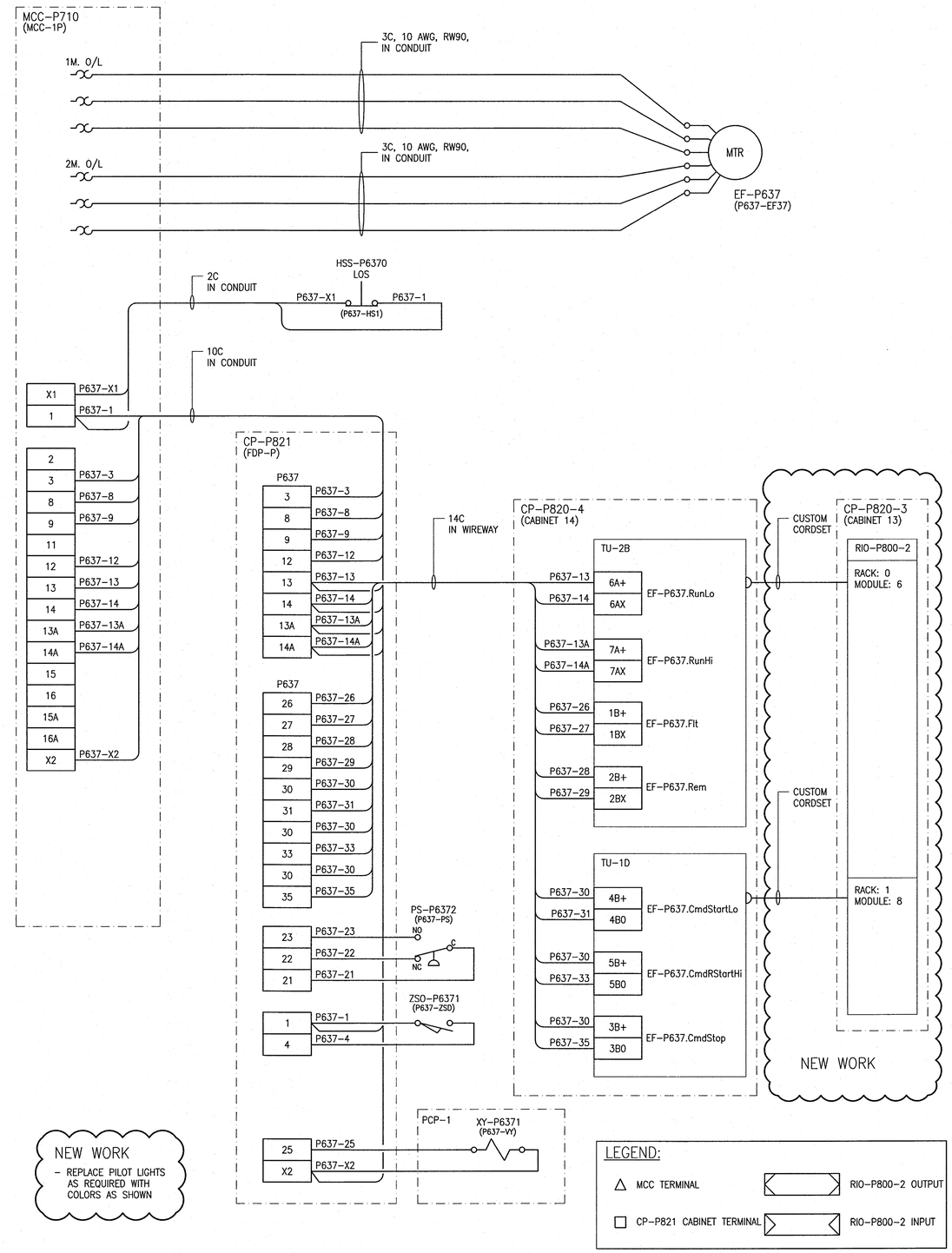

NEW WORK
– REPLACE PILOT LIGHTS AS REQUIRED WITH COLORS AS SHOWN

NOTES

1. THIS DRAWING SUPERCEDES SEP–1195, SEP–1196.
2. THIS DRAWING WAS BASED UPON EXISTING DOCUMENTATION AND MAY NOT REPRESENT THE ACTUAL INSTALLATION.
3. PREVIOUS IDENTIFIERS ARE SHOWN IN PARENTHESES.
4. THE ENGINEER'S DESIGN RESPONSIBILITY IS LIMITED TO THE REPLACEMENT OF THE DCS WITH PLC–BASED CONTROL.
5. PRESSURE SWITCH SHOWN IN SHELF STATE.

APEGM Certificate of Authorization
SNC-Lavalin Inc.
No. 4489

REFERENCE DRAWINGS	DESCRIPTION
1–0102–AILD–P602	LOOP DIAGRAM, AHU–P634, PRIMARY CLARIFIER 3 GAS FIRED AIR HANDLING UNIT

NO.	REVISIONS	DATE	DESIGN	CHECK
00	ISSUED FOR CONSTRUCTION – 976–2016	2017/04/05	SSB	TMC

CH2MHILL. SNC·LAVALIN KGS GROUP

DESIGNED BY: S. BOGHOSIAN	CHECKED BY: T. CHURCH
DRAWN BY: S. BOGHOSIAN	APPROVED BY: E. RYCZKOWSKI
SCALE: NTS	ISSUED FOR CONSTRUCTION BY: J. SHUMKA
DATE: 2014/07/11	DATE: 2017/04/05
CONSULTANT NO.: 474248	

ENGINEER'S SEAL: PROVINCE OF MANITOBA, T. M. CHURCH, Member 32682, REGISTERED PROFESSIONAL ENGINEER, Apr. 4, 2017

Winnipeg — THE CITY OF WINNIPEG, WATER AND WASTE DEPARTMENT

SOUTH END WATER POLLUTION CONTROL CENTRE
SEWPCC UPGRADING/EXPANSION PROJECT
ELECTRICAL – MOTOR STARTER SCHEMATIC
EF–P637
PRIMARY CLARIFIER 3 EXHAUST FAN

CITY DRAWING NUMBER	SHEET	REV.	SIZE
1–0102–EMCL–P617	001	00	A1

LAST SAVE: 2017/03/24 – 1:19pm
PATH: C:\Users\deguh\Desktop\EMCL\1–0102–EMCL–P617.dwg
PLOT DATE: Mar 24, 2017 – 1:19pm
FILE NAME: 1–0102–EMCL–P617.dwg