A1 SIZE – 594mm x 841mm

GENERAL ARCHITECTURAL NOTES

1. FOR LOCATION OF EQUIPMENT BASES , SEE MECHANICAL , ELECTRICAL , PROCESS AND STRUCTURAL DRAWINGS. CARRY FLOOR FINISHES UP AND OVER EQUIPMENT BASES TO SUIT EQUIPMENT SUPPLIED.
2. FOR LOCATION OF ADDITIONAL ROOF PENETRATIONS (SUCH AS VENTS CONDUITS ETC.) SEE MECHANICAL , ELECTRICAL , PROCESS DRAWINGS AND SPECIFICATIONS.
3. PROVIDE CONTROL JOINTS IN CERAMIC TILES AT MAXIMUM 5 METRES O.C., AROUND COLUMNS , EQUIPMENT BASES , AND AROUND PERIMETER OF ROOMS.
4. REFER TO MECHANICAL , ELECTRICAL AND PROCESS DRAWINGS FOR ADDITIONAL PENETRATIONS IN MASONRY WALLS. PROVIDE LINTELS OVER ALL OPENINGS AS DETAILED ON DRAWINGS. DESIGN LINTELS AS PER REQUIREMENT OF THE NATIONAL BUILDING CODE OF CANADA 2010.
5. ALL LOOSE STEEL LINTELS ARE TO BE HOT DIPPED GALVANIZED, UNLESS NOTED OTHERWISE, WITH MINIMUM 200 mm BEARING AT EACH END. PROVIDE BOND BREAKER ON FULL BEARING SURFACE UNDER LOOSE LINTELS. LINTELS THAT ARE NOT INDICATED OR DETAILED. ARE TO BE DESIGNED AS PER REQUIREMENTS OF NATIONAL BUIDING CODE OF CANADA 2010.
6. ALL MASONRY OPENINGS UP TO 3 METRE WIDE ARE TO RECEIVE LINTEL BLOCKS AS DETAILED IN STRUCTURAL DRAWINGS.
7. REINFORCE ALL MASONRY AS PER DETAILS ON STRUCTURAL DRAWINGS.
8. PROVIDE CONTROL JOINTS AT LOCATIONS INDICATED ON DRAWINGS AND AT 6000mm MAXIMUM.
9. PROVIDE INSULATED ALUMINUM BLANK OFF PANELS BEHIND UNUSED PORTIONS OF LOUVERS (SEE HVAC AND LOUVER SCHEDULES FOR EXTENT AND LOCATION).
10. UNLESS OTHERWISE INDICATED, PLAN DIMENSIONS ARE TO COLUMN GRID ON CENTERLINES, NOMINAL SURFACE OF MASONRY, FACE OF STUDS AND FACE OF CONCRETE WALLS.
11. "FLOOR ELEVATION" REFERS TO TOP OF CONCRETE SLABS. FINISH FLOORING IS INSTALLED ABOVE THE FLOOR LINE. FOR DEPRESSED FLOORS AND CURBS, SEE STRUCTURAL DRAWINGS.
12. REPETITIVE FEATURES ARE NOT DRAWN IN THEIR ENTIRETY AND SHALL BE COMPLETELY PROVIDED AS IF DRAWN IN FULL.
13. LINE OF EXISTING GRADES, AS SHOWN ON THE BUILDING ELEVATIONS AND SECTIONS ARE APPROXIMATE. THEY ARE AT THE BUILDING FACE, OR ON THE SECTION END EXCEPT AS NOTED.
14. VERIFY ALL ROUGH–IN DIMENSIONS FOR EQUIPMENT PROVIDED IN THIS CONTRACT, OR BY OTHERS.
15. FOR EXTENT OF CHEMICAL RESISTANT COATINGS (CRC), REFER TO ARCHITECTURAL DRAWINGS.
16. CARRY CHEMICAL RESISTANT COATING UP AND OVER CONTAINMENT WALLS AND EQUIPMENT BASES PRIOR TO INSTALLATION OF CHEMICAL HOLDING TANKS AND ANCILLARY EQUIPMENT.
17. DIMENSIONS, ELEVATIONS AND DETAILS OF EXISTING STRUCTURES ARE BASED ON PREVIOUS CONTRACT DOCUMENTS VERIFY ALL INFORMATION ON SITE PRIOR TO COMMENCEMENT OF CONSTRUCTION.
18. FOR EXTENT OF CEMENTITUOUS WATERPROOFING, REFER TO STRUCTURAL AND ARCHITECTURAL DRAWINGS.
19. FOR ABBREVIATIONS, SEE GENERAL ABBREVIATION DRAWINGS.
20. ITEMS SHOWN AS EXISTING ARE BASED ON AVAILABLE DOCUMENTATION AND MAY NOT ACTUALLY BE REPRESENTATIVE OF THE EXISTING INFRASTRUCTURE. THE DESIGN ENGINEER IS ONLY RESPONSIBLE FOR INFRASTRUCTURE THAT IS SHOWN AS A NEW INSTALLATION. THE CONTRACTOR IS RESPONSIBLE FOR CONFIRMING THE STATE OF THE EXISTING INFRASTRUCTURE THAT MAY HAVE AN IMPACT ON THE INSTALLATION OF NEW EQUIPMENT.

ARCHITECTURAL LEGEND

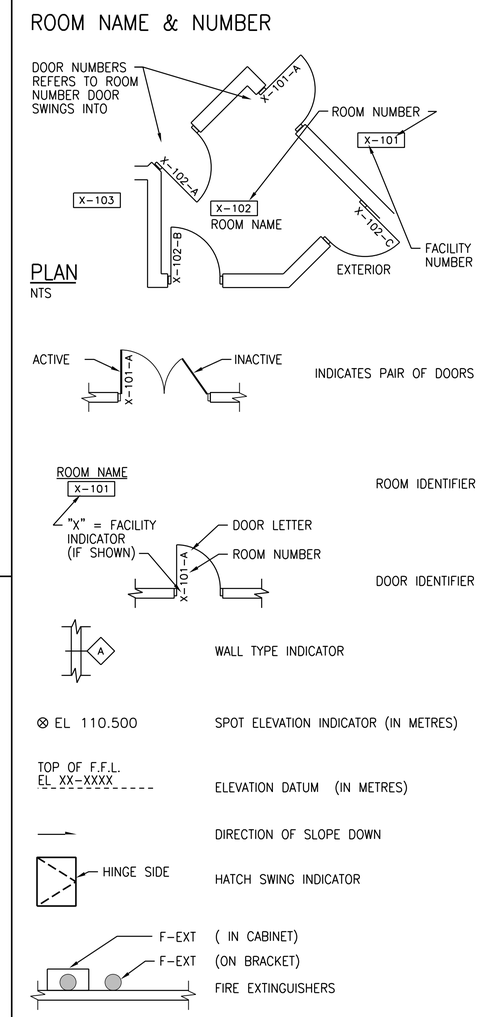

ARCHITECTURAL MATERIAL SYMBOLS

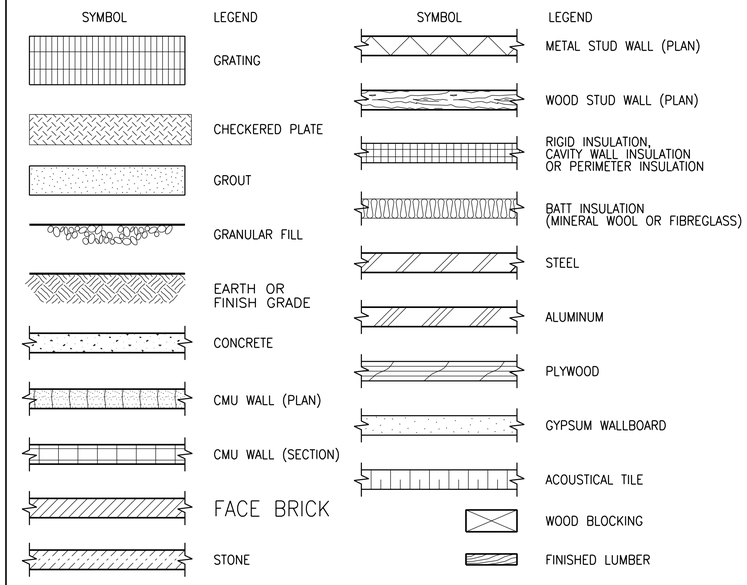

MODULAR MASONRY DIMENSIONING

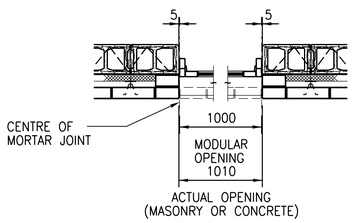

PLAN

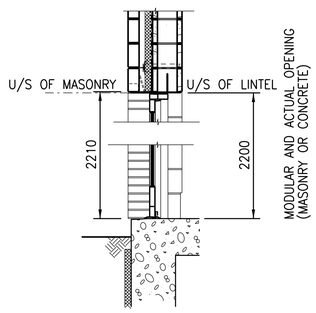

EXTERIOR OPENINGS WITH STEEL LINTEL

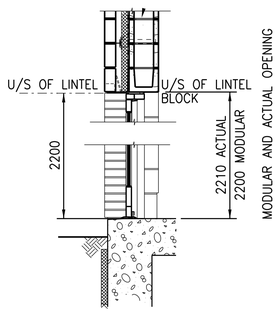

EXTERIOR OPENINGS WITH CMU LINTEL BLOCK

MODULAR DIMENSIONING PHILOSOPHY

UNLESS OTHERWISE NOTED:
ALL DIMENSIONS ON DRAWINGS ARE INDICATED AS MODULAR.

EXAMPLE:

FOR HORIZONTAL OPENINGS, IF AN OPENING IS DIMENSIONED AS 1000, THE ACTUAL OPENING IS 1010, TO COMPENSATE FOR ADDITIONAL 10mm MORTAR JOINT. THE CONCRETE OPENING WOULD ALSO NEED BE 1010.

VERTICAL OPENINGS FOR EXTERIOR CMU OR CONCRETE (MODULAR AND ACTUAL) ARE SIMILAR, THAT IS, A MODULAR OPENING OF 2200 IS ACTUALLY 2210.

VERTICAL OPENINGS FOR INTERIOR CMU LINTEL BOCKS OR CONCRETE (MODULAR AND ACTUAL) ARE SIMILAR, THAT IS, A MODULAR OPENING DIMENSIONED AS 2200 IS ACTUALLY 2210. WHEN USING STEEL LINTELS FOR BOTH WYTHES, THEN THE ACTUAL OPENING WILL BE 2200

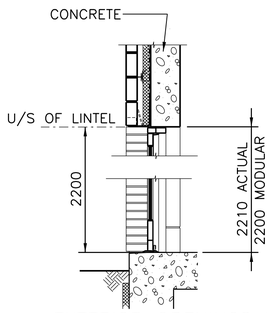

EXTERIOR OPENINGS WITH CONCRETE BACK–UP

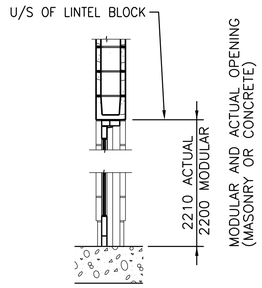

INTERIOR OPENINGS

EXAMPLE FOR MASONRY OPENINGS

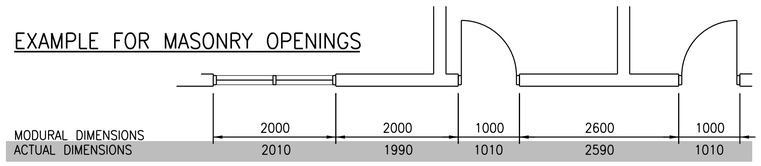

STONE SUPPORT SCHEDULE

LOCATION	WALL TYPE	LINTEL TYPE
CAVITY WALL STONE WITH CONCRETE/CMU BACK UP	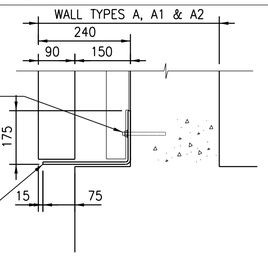	S1
STONE SILL WITH CONCRETE/CMU BACK UP	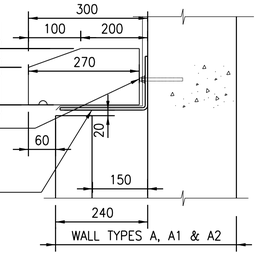	S2

*SEE DRAWINGS FOR OTHER LINTELS NOT SHOWN IN SCHEDULE

APEGM
Certificate of Authorization
CH2M HILL Canada Ltd.
No. 1441

NO.	REVISIONS	DATE	DESIGN	CHECK
02	ISSUED FOR CONSTRUCTION – 976–2016	2017/04/05	N.B.	J.C.
01	ISSUED FOR CONSTRUCTION	10/2015	N.B.	J.C.
00	ISSUED FOR TENDER	08/2015	N.B.	J.C.

PLOT DATE: 2017\03\30

CH2MHILL CANADA Architects Inc.
SNC·LAVALIN KGS GROUP

DESIGNED BY: R. ZAKKO	CHECKED BY: B. KOLIS–HUPA
DRAWN BY: J. LIN	APPROVED BY: H.T. FREIHAMMER
SCALE: NTS	ISSUED FOR CONSTRUCTION BY: J. SHUMKA
DATE: 2017/04/05	DATE: 2017/04/05
CONSULTANT NO.: 474248	

ENGINEER'S SEAL
PROVINCE OF MANITOBA REID ZAKKO 04-05-2017 REGISTERED ARCHITECT

Winnipeg
THE CITY OF WINNIPEG
WATER AND WASTE DEPARTMENT

SOUTH END WATER POLLUTION CONTROL CENTRE
SEWPCC UPGRADING/EXPANSION PROJECT
BUILDING
LEGEND AND GENERAL NOTES

CITY DRAWING NUMBER	SHEET	REV.	SIZE
1–0102–BAAA–A001		02	A1

FILE NAME: 1–0102–BAAA–A001.dgn

©CH2M HILL 2017. ALL RIGHTS RESERVED.