A1 SIZE – 594mm x 841mm

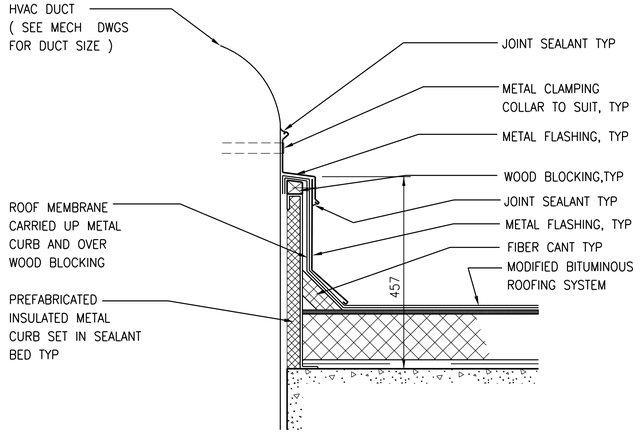

1 SECTION DETAIL–DUCT PENETRATION THROUGH ROOF
1:8

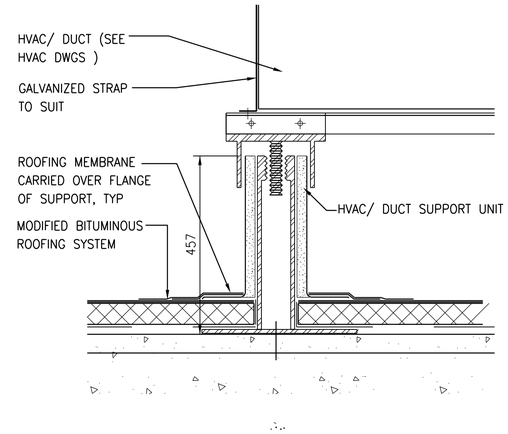

2 SECTION DETAIL–DUCT/HVAC UNIT SUPPORT AT ROOF
1:8

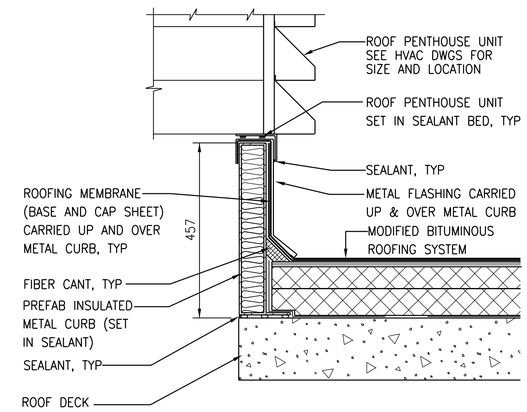

3 SECTION DETAIL–ROOF PENTHOUSE UNIT
1:8

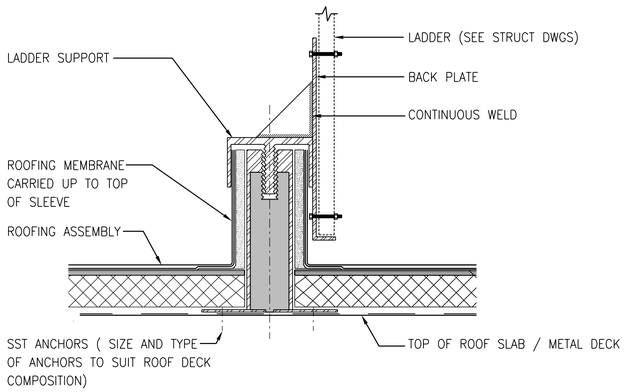

4 SECTION DETAIL–ROOF LADDER SUPPORT
1:8

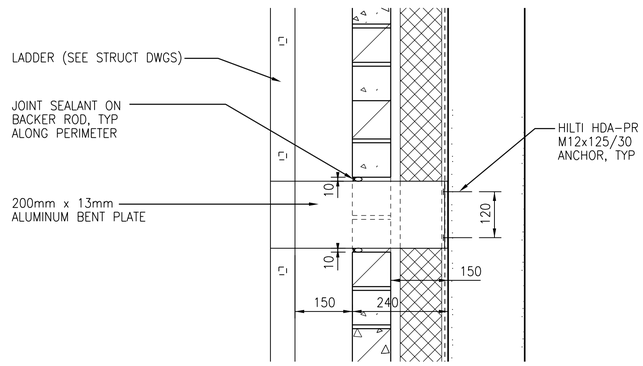

5 SECTION DETAIL–LADDER SUPPORT AT STONE VENEER
1:8

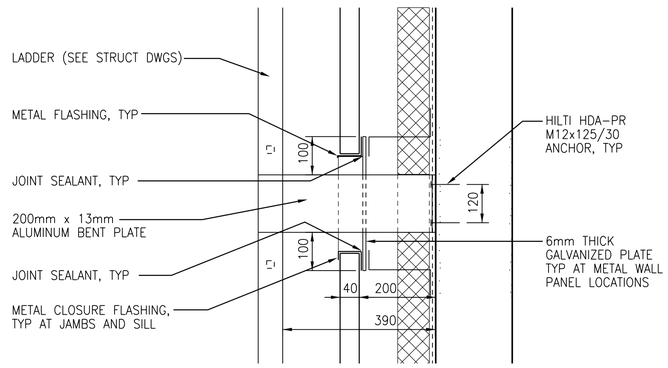

6 SECTION DETAIL–LADDER SUPPORT AT METAL PANEL
1:8

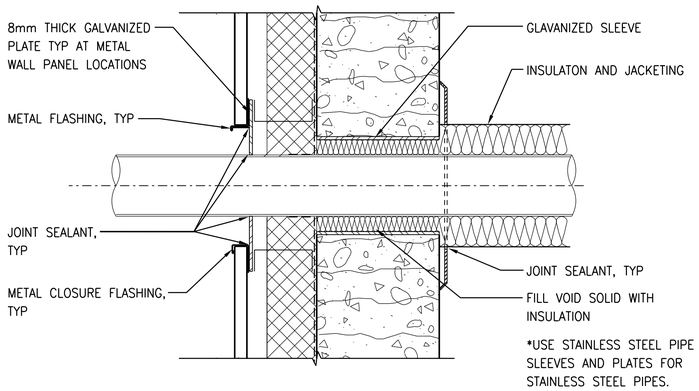

7 PIPE THROUGH EXTERIOR WALL (@ METAL WALL PANELS)
1:10

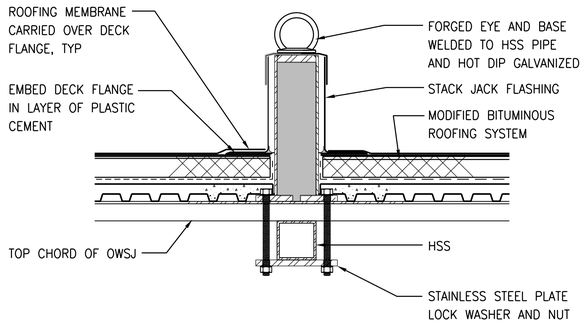

8 SECTION DETAIL– ROOF FALL ARREST ANCHOR (BOLT AROUND OWSJ)
NTS

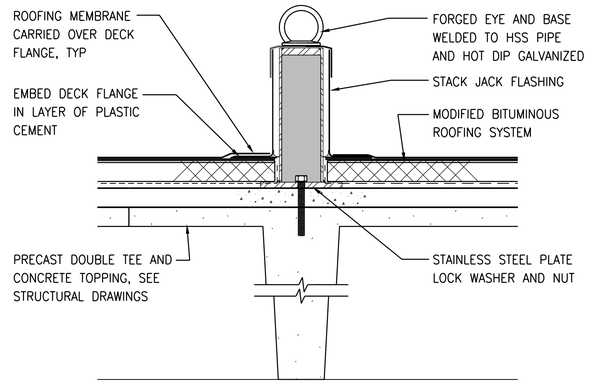

9 SECTION DETAIL– ROOF FALL ARREST ANCHOR (FOR DOUBLE T–JOIST)
NTS

APEGM
Certificate of Authorization
CH2M HILL Canada Ltd.
No. 1441

NO.	REVISIONS	DATE	DESIGN	CHECK
03	ISSUED FOR CONSTRUCTION – 976–2016	2017/04/05	M.R.	J.C.
02	ISSUED FOR 90% PRELIMINARY REVIEW	2016/09/06	M.R.	J.C.
01	ISSUED FOR CONSTRUCTION	10/2015	N.B.	J.C.
00	ISSUED FOR TENDER	08/2015	N.B.	J.C.

CH2MHILL CANADA Architects Inc.
SNC·LAVALIN KGS GROUP CONSULTING ENGINEERS

DESIGNED BY: R. ZAKKO	CHECKED BY: B. KOLIS–HUPA
DRAWN BY: N. BOYCHUK	APPROVED BY: H.T. FREIHAMMER
SCALE: AS SHOWN	ISSUED FOR CONSTRUCTION BY: J. SHUMKA
DATE: 2017/04/05	DATE: 2017/04/05
CONSULTANT NO.: 474248	

ENGINEER'S SEAL
PROVINCE OF MANITOBA
REID ZAKKO
24-05-2017
REGISTERED ARCHITECT

Winnipeg
THE CITY OF WINNIPEG
WATER AND WASTE DEPARTMENT

SOUTH END WATER POLLUTION CONTROL CENTRE
SEWPCC UPGRADING/EXPANSION PROJECT
BUILDING
02
STANDARD DETAILS (2)

CITY DRAWING NUMBER	SHEET	REV.	SIZE
1–0102–BDTL–A004		03	A1

PLOT DATE: 2017\03\29
FILE NAME:

©CH2M HILL 2017. ALL RIGHTS RESERVED.