A1 SIZE – 594mm x 841mm

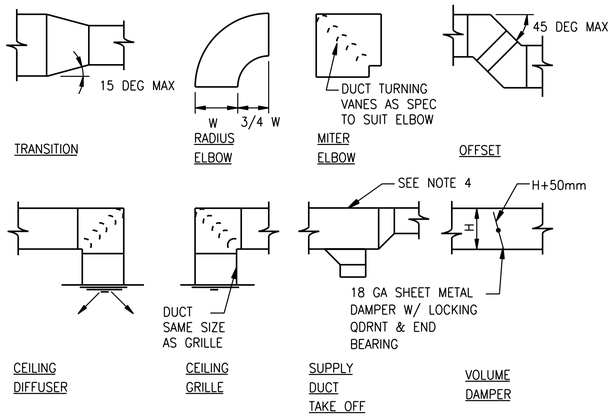

NOTES:

1. CEILING DIFFUSERS AND GRILLES ARE TO BE LOCATED IN THE PANELS BETWEEN THE T–BAR GRIDS IN ALL SUSPENDED CEILING SYSTEMS. WHERE REFLECTED CEILING PLANS ARE PROVIDED, LOCATE DIFFUSERS AND GRILLES AS INDICATED.
2. SPLITTER DAMPERS ARE NOT ALLOWED.
3. PROVIDE VOLUME DAMPERS FOR EACH GRILLE AT EACH RETURN CONNECTION AND ANY OTHER LOCATIONS INDICATED ON THE DRAWINGS, IN ACCORDANCE WITH TYPICAL DUCT CONSTRUCTION DETAILS ABOVE. DAMPERS TO BE INSTALLED MINIMUM 1.5m FROM GRILLE, EXCEPT AS NOTED.
4. 45° WYE OR CONICAL TEE LOW LOSS SUPPLY DUCT TAKE OFF.

DUCT CONSTRUCTION DETAILS

NTS

2305–107

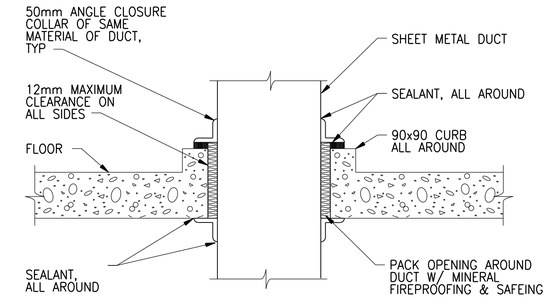

FLOOR PENETRATION – WET AREA

NTS

2305–411

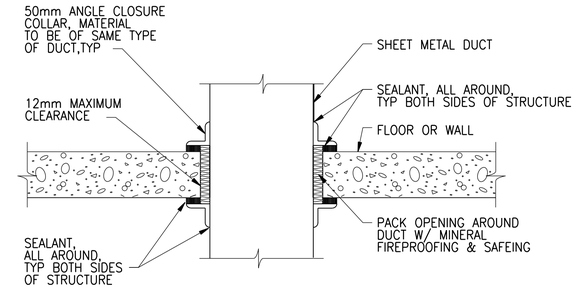

NOTES:

1. WALL PENETRATION SIMILAR.
2. 50mm ANGLE CLOSURE COLLAR OF SAME MATERIAL AS DUCT.

FLOOR PENETRATION – DRY AREA

NTS

2305–412

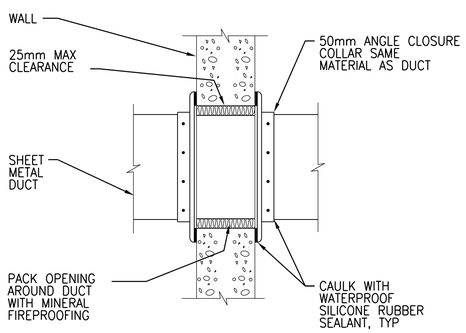

DUCT WALL PENETRATION

NTS

2305–809

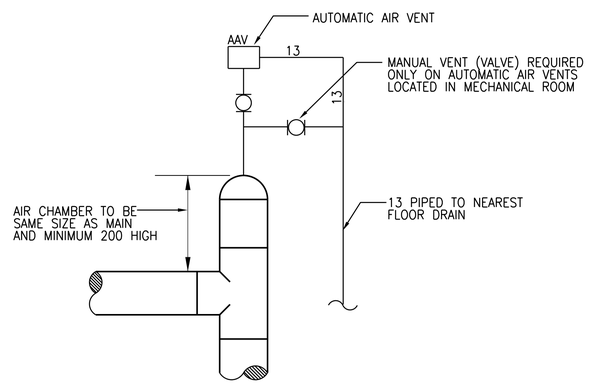

AUTOMATIC AIR VENT INSTALLATION

NTS

2320–901

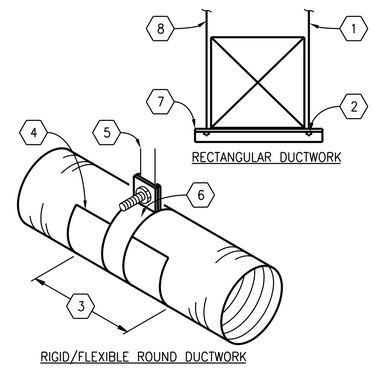

1. ATTACH TO STRUCTURE WITH BEAM CLAMPS OR MASONRY EXPANSION BOLTS
2. NUT WITH LOCK WASHER
3. LENGTH EQUALS DIAMETER OF DUCT
4. STAINLESS STEEL SHEET METAL SADDLE
5. ATTACH TO STRUCTURE PER SMACNA RECOMMENDATIONS
6. 25MM MIN BAND CLAMP
7. KINDORF HANGER WITH ALL–THREAD ROD IN TRAPEZE CONFIGURATION
8. ALL–THREAD ROD

NOTES:

1. DO NOT USE POWDER POWERED FASTENING SYSTEMS TO ATTACH SUPPORTS TO STRUCTURE.
2. SUPPORT SYSTEM MUST NOT DAMAGE DUCT, INSULATION, OR CAUSE DUCT SHAPE DEFORMATION.
3. HANGER SIZES SHALL BE IN ACCORDANCE WITH SMACNA, LATEST EDITION.

DUCTWORK SUPPORT

NTS

2331–102

APEGM
Certificate of Authorization
CH2M HILL Canada Ltd.
No. 1441

NO.	REVISIONS	DATE	DESIGN	CHECK
00	ISSUED FOR CONSTRUCTION – 976–2016	2017/04/05	K.F.	J.C.

CH2MHILL. SNC·LAVALIN KGS GROUP

DESIGNED BY: S. BEGG
CHECKED BY: T. TRAN
DRAWN BY: K. FONG
APPROVED BY: H.T. FREIHAMMER
SCALE: NTS
ISSUED FOR CONSTRUCTION BY: J. SHUMKA
DATE: 2017/04/05
DATE: 2017/04/05
CONSULTANT NO.: 474248

ENGINEER'S SEAL
PROVINCE OF MANITOBA – T.T. TRAN – Member 40578 – REGISTERED PROFESSIONAL ENGINEER
T.T. TRAN 17/04/05

Winnipeg
THE CITY OF WINNIPEG
WATER AND WASTE DEPARTMENT

SOUTH END WATER POLLUTION CONTROL CENTRE
SEWPCC UPGRADING/EXPANSION PROJECT
MECHANICAL
HVAC
STANDARD DETAILS (1)

CITY DRAWING NUMBER	SHEET	REV.	SIZE
1–0102–MDTL–A005		00	A1

PLOT DATE: 2017\03\29
FILE NAME: 1–0102–MDTL–A005.dgn

©CH2M HILL 2017. ALL RIGHTS RESERVED.