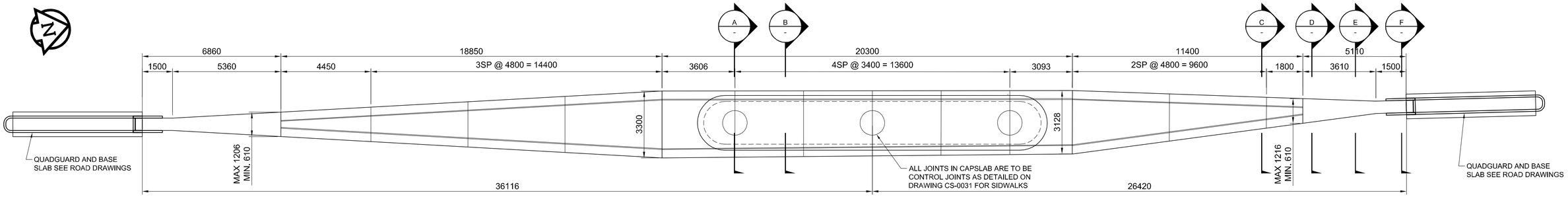

PLAN
Scale 1:100

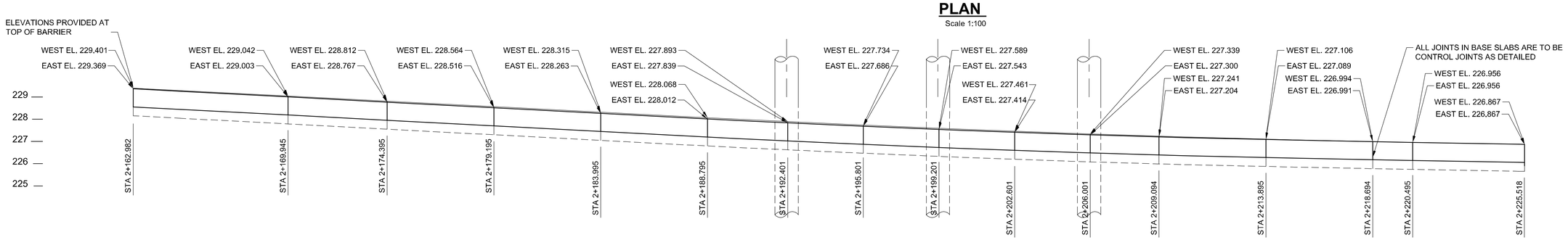

ELEVATION
Scale 1:100

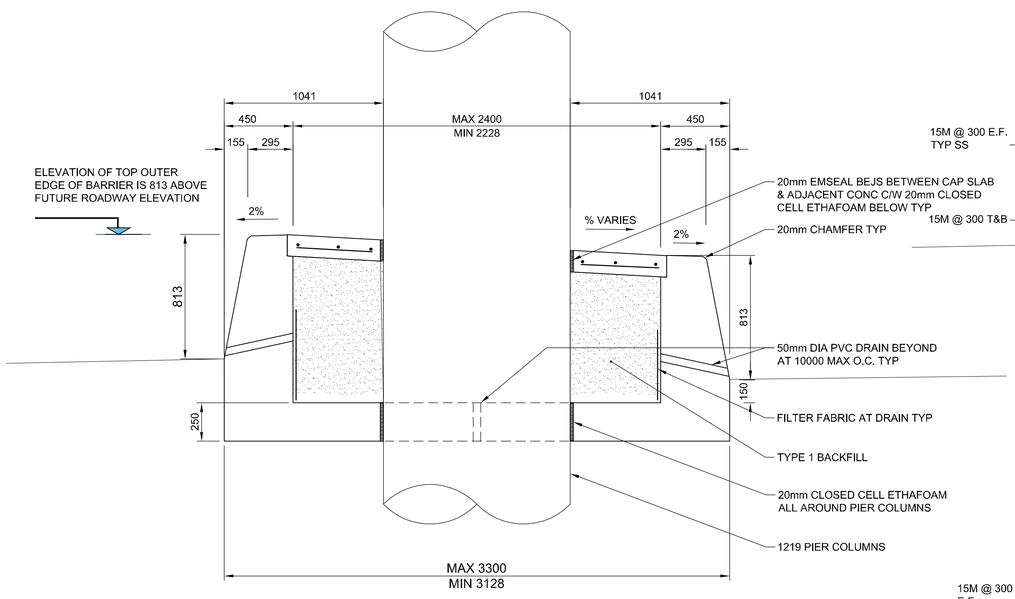

A SECTION
Scale 1:20

NOTES:
1. ADJUST LOCATION OF REINFORCING IN BARRIER TO SUIT ANCHOR LOCATIONS FOR QUADGUARD CONNECTED TO END OF CONCRETE BARRIER.
2. All BARRIER, SLAB AND CAP REINFORCING SHALL BE STAINLESS STEEL.

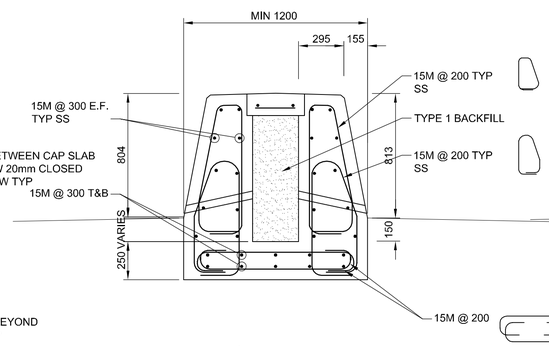

C SECTION
Scale 1:20

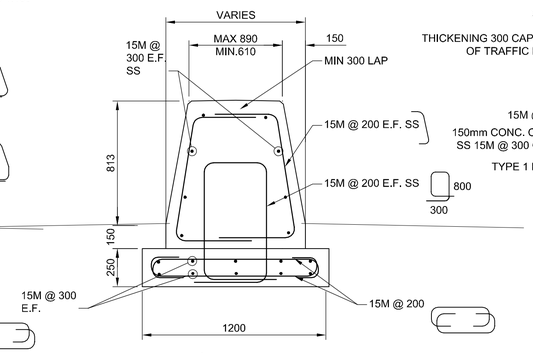

D SECTION
Scale 1:20

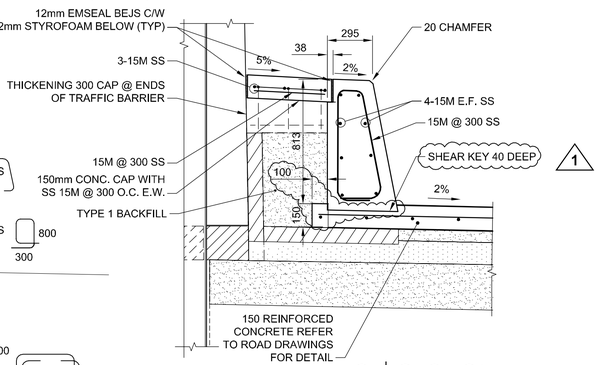

G SECTION
CS-0029 Scale 1:20

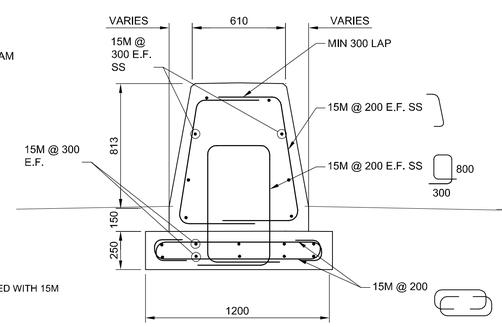

E SECTION
Scale 1:20

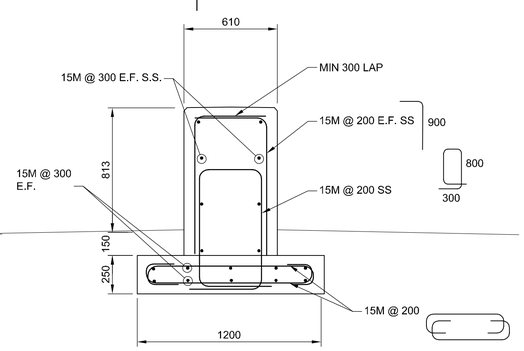

F SECTION
Scale 1:20

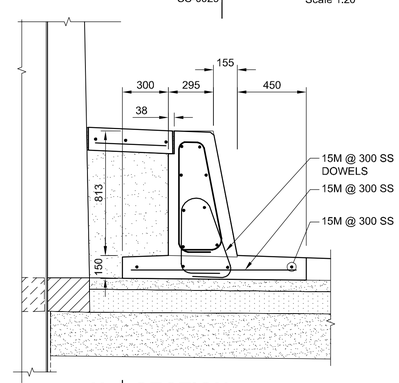

H SECTION
CS-0029 Scale 1:20

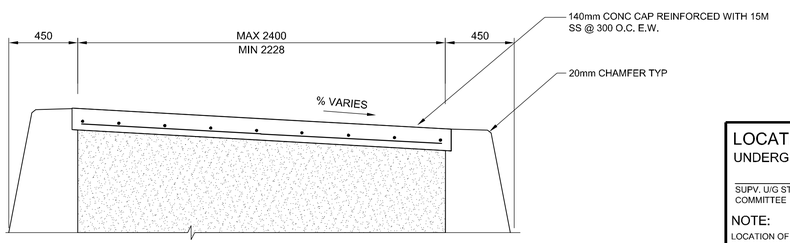

B SECTION
Scale 1:20

BID OPPORTUNITY NO. 712-2013

LOCATION APPROVED
UNDERGROUND STRUCTURES

SUPV. U/G STRUCTURES COMMITTEE — DATE

NOTE:
LOCATION OF UNDERGROUND STRUCTURES AS SHOWN ARE BASED ON THE BEST INFORMATION AVAILABLE. BUT NO GUARANTEE IS GIVEN THAT ALL EXISTING UTILITIES ARE SHOWN OR THAT THE GIVEN LOCATIONS ARE EXACT. CONFIRMATION OF EXISTENCE AND EXACT LOCATION OF ALL SERVICES MUST BE OBTAINED FROM THE INDIVIDUAL UTILITIES BEFORE PROCEEDING WITH CONSTRUCTION.

B.M.
ELEV.

NO.	REVISIONS	DATE	BY
1	ISSUED FOR ADDENDUM	2013/12/10	DJH
0	ISSUED FOR TENDER	2013/11/21	KC

AECOM

DESIGNED BY	FT	CHECKED BY	EBL
DRAWN BY	KC	APPROVED BY	EBL
HOR. SCALE:	AS NOTED	RELEASED FOR CONSTRUCTION BY:	
VERTICAL:	AS NOTED		xxxx
DATE	2013-xx-xx	DATE	2013-xx-xx

ENGINEER'S SEAL
PROVINCE OF MANITOBA
ORIGINAL SIGNED BY
F. TABET
Member 33659
ON NOV 21, 2013
REGISTERED PROFESSIONAL ENGINEER

CONSULTANT DRAWING NO.
60273041-01-CS-605.dwg

Winnipeg

THE CITY OF WINNIPEG
PUBLIC WORKS DEPARTMENT

PLESSIS ROAD TWINNING AND GRADE SEPARATION AT CN REDDITT SUBDIVISION
CONTRACT 3

CITY DRAWING NUMBER U238-2014-2034
SHEET 34 OF 37

TRAFFIC BARRIERS

CS-0034

AECOM
Certificate of Authorization
AECOM Canada Ltd.
No. 4671 Date: ORIGINAL SIGNED ON 2013/11/21

A1 – 841x594
2013-12-12
_ACCOMMON_DEFAULT.CTB
P:\60273041\000-CADD\02-SHEETS\CS\60273041-01-CS-605.DWG