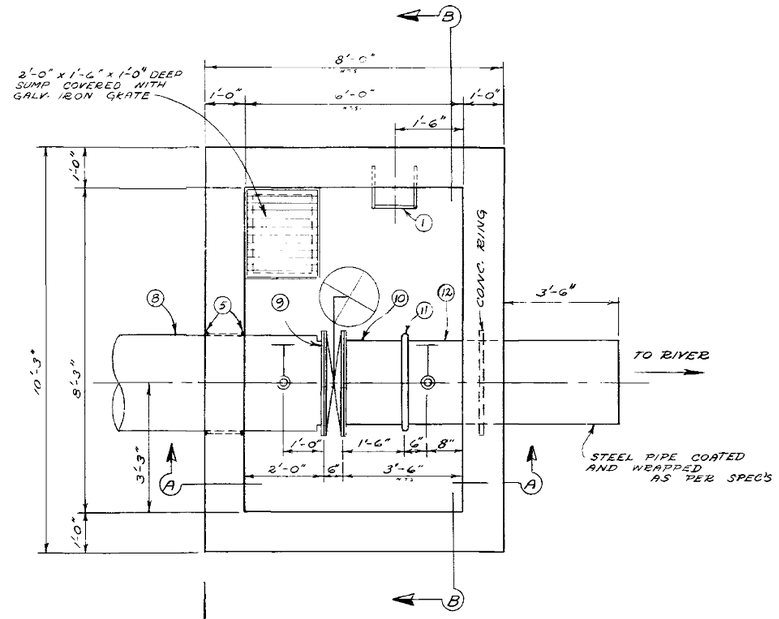

FLOOR PLAN

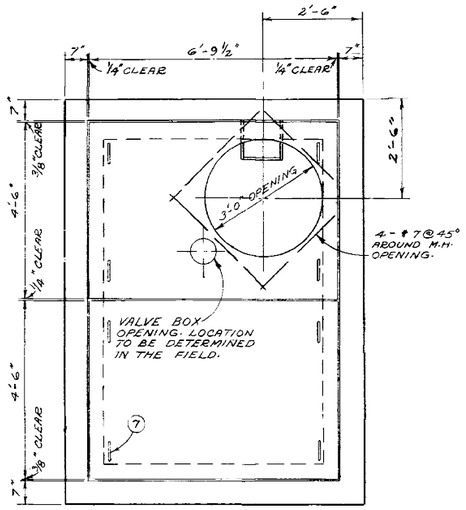

ROOF PLAN

SECTION A — SECTION B

No.	DESCRIPTION	QUANTITY (PER CHAMBER)
1.	Standard City of Winnipeg M.H. Steps at 15" C-C. For details see drawing No. A-817	
2.	Standard City of Winnipeg Waterworks M.H. frame and solid cover.	
3.	30" x 36" ø ASTM C76-70 Class II eccentric; flat top reducer section (Precast concrete).	
4.	36"ø ASTM C76-70 Class II Precast concrete M.H. section with "Ram-Nek" or an approved equal gaskets.	
5.	Notches in Roof Slab joints and around Pipe Openings for details see drawing Number A-874.	
6.	U-Bolt Hook. For details see drawing Number A-877.	2
7.	Lifting Lugs. For details see drawing Number A-878.	8
8. ○	24"ø concrete pipe 6'-0" long Sta. 10+86 - Bell to flange Sta. 17+47 - Flange to spigot.	1
9. ○	24"ø butterfly valve-flanged.	1
10.	24"ø STEEL adaptor-flange to plain end. 1'-6" LONG.	1
11.	24"ø VICTAULIC coupling style #51.	1
12.	24"ø STEEL pipe plain end to plain end 6'-0" long	1
13.	2"ø steel outlet - flange	2
14.	2"ø bronze threaded flange	2
15.	2"ø bronze nipple - threaded	2
16.	2"ø bronze gate valve threaded	2
17.	3"ø steel outlet - flange	2
18.	3"ø bronze threaded flange	2
19.	3"ø bronze nipple - threaded	2
20.	3"ø bronze gate valve - threaded	2
21.	3"ø 90° galvanized elbow	2

○ TO BE SUPPLIED BY THE CITY

LEGEND

WATERWORKS, WASTE AND DISPOSAL: UNDERGROUND UTILITIES

- PROPOSED FORCEMAIN, INTERCEPTOR OR SECONDARY SEWER
- EXISTING FORCEMAIN, INTERCEPTOR OR SECONDARY SEWER — W.W.D. 24"ø SEWER
- PROPOSED FEEDERMAIN
- EXISTING FEEDERMAIN — W.W.D. 24"ø W.M.
- W.W.D. — WATERWORKS, WASTE AND DISPOSAL

OTHER UNDERGROUND UTILITIES

- COMMUNITY SEWER
- COMMUNITY WATERMAIN
- GAS
- HYDRO DUCT
- M.T.S. DUCT OR CABLE
- STREET LIGHTING, RAILWAY SIGNAL OR TRAFFIC SIGNAL CABLE

SURFACE UTILITIES

- COMMUNITY BOUNDARY LINE
- FENCE LINE
- POLE LINE
- RAILWAY LINE

MISCELLANEOUS SYMBOLS

- CATCH BASIN
- CULVERT
- HYDRANT
- MANHOLE
- HYDRO OR M.T.S. POLE
- LAMP STANDARD
- RAILWAY OR TRAFFIC SIGNAL STANDARD
- SURVEY BAR
- TREE
- VALVE

NOTES

MAIN LINE VALVE CHAMBERS AT STATION 10+86 & STATION 17+47

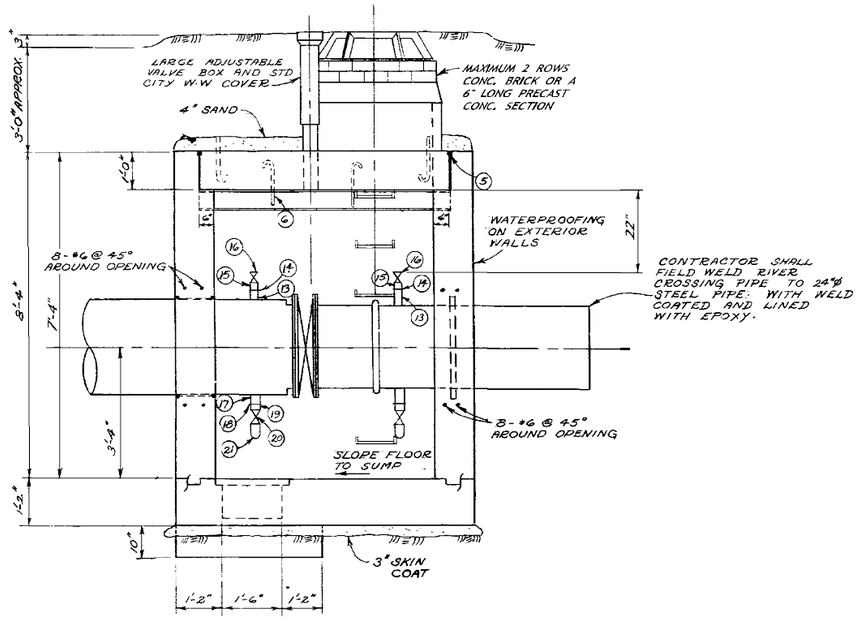

SECTION "A-A"

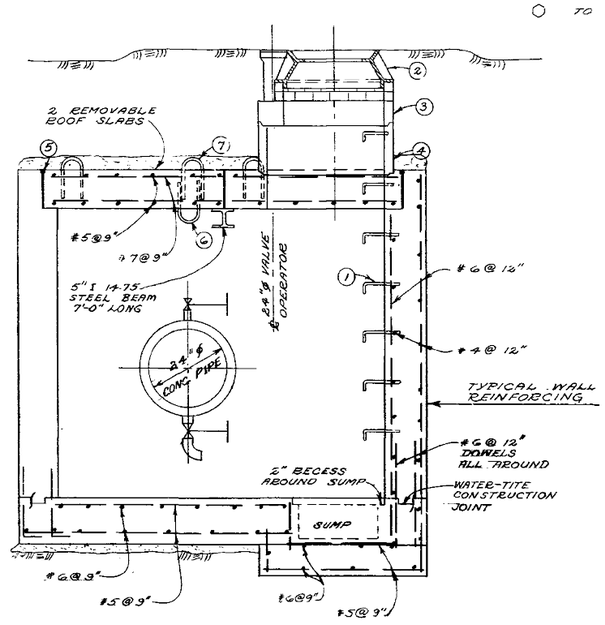

SECTION "B-B"

NOTE:
FOR LOCATION PLAN OF THIS VALVE CHAMBER SEE DRAWING D-1251

NOTE:
THIS DRAWING WAS ALSO FOR VALVE CHAMBER AT STA 17+46.57, WHICH WAS ABANDONED IN 1989, DURING FEEDERMAIN REALIGNMENT. SEE DRAWING D-1252A

NOTE: THIS DRAWING CONTAINS A RASTER IMAGE
FILENAME : D-1258.TIF

NO.	DESCRIPTION	DATE	BY
1	REVISED TO AN AUTOCAD DRAWING	05.08.02	WKT

REVISIONS

FIELD BOOK(S) NO.
LAND SURVEY PLAN(S) NO.
B. M.
SURVEYED BY
DATE

The City of Winnipeg
Waterworks, Waste and Disposal Division

DEPARTMENT
WATERWORKS

NORTH KILDONAN FEEDERMAIN
HENDERSON TO MAIN
MAIN LINE VALVE CHAMBER
AT STATION 10+87.22

PROVINCE OF MANITOBA — C. H. TOTTLE — REGISTERED ENGINEER

DESIGNED BY	DRAWN BY V. DUMORE
CHECKED BY	DATE OCTOBER 23/'73
APPROVED BY	
SCALE ½" = 1'-0"	DRAWING NO. D-1258