Door Schedule														
Number	Height	Width	Thickness	Type	Material	Core	Finish	Level	Hardware Code	Frame Type	Frame Material	Frame Finish	Fire Rating	Comments
001	80"	32"	1 3/4"	D	WD		PNT	Lower Level	1		WD	PNT		EXISTING CORRIDOR DOOR- LOCKSET ONLY
008	80"	36"	1 3/4"	D	HM		PNT	Lower Level	2	F5	HM	PNT	45 MIN.	
009	80"	32"	1 3/4"	D	HM		PNT	Lower Level	3	F5	HM	PNT	45 MIN.	
010	80"	44"	1 3/4"	D	HM		PNT	Lower Level	4	F5	HM	PNT		UNDERCUT DOOR 1/2"
012	80"	36"	1 3/4"	D	HM	SC	PNT	Lower Level	3	F5	HM	PNT	45 MIN.	
013a	80"	32"	1 3/4"	E	HM		PNT	Lower Level	5	F5	HM	PNT	45 MIN.	
014a	80"	42"	1 3/4"	A	ALUM		ANOD	Lower Level	7	F3	ALUM	ANOD		
014b	80"	42"	1 3/4"	A	ALUM	INSUL	ANOD	Lower Level	8	F3	ALUM	ANOD		
015	80"	32"	1 3/4"	D	HM	INSUL	PNT	Lower Level	9	F5	HM	PNT		EXISTING DOOR OPENING; CONFIRM CLEARANCES IN FIELD
016	80"	36"	1 3/4"	E	HM		PNT	Lower Level	10	F5	HM	PNT	45 MIN.	
017	80"	36"	1 3/4"	E	HM		PNT	Lower Level	3	F5	HM	PNT	45 MIN.	
101a	83 3/4"	44"	1 3/4"	A	ALUM	INSUL	ANOD	Main Level	8	F1	ALUM	ANOD		
101b	83 3/4"	44"	1 3/4"	A	ALUM		ANOD	Main Level	7	F2	ALUM	ANOD		
102	83 3/4"	42"	1 3/4"	A	ALUM		ANOD	Main Level	16	F2	ALUM	ANOD		
103a	80"	44"	1 3/4"	B	WD	SC	STN	Main Level	11	F4	WD	STN		
103b	80"	44"	1 3/4"	B	WD	SC	STN	Main Level	12	F4	WD	STN		
103c	80"	44"	1 3/4"	B	WD	SC	STN	Main Level	12	F4	WD	STN		
103e	80"	32"	1 3/4"	D	HM	INSUL	PNT	Main Level	9	F5	HM	PNT		EXISTING DOOR OPENING; CONFIRM CLEARANCES IN FIELD
104	83 3/4"	72"	1 3/4"	C	WD/GLASS	SC	PNT	Main Level	13	EXISTING	WD	PNT		EXISTING DOORS; ADD PANIC HDWE ONLY
105	83 3/4"	72"	1 3/4"	C	WD/GLASS	SC	PNT	Main Level	13	EXISTING	WD	PNT		EXISTING DOORS; ADD PANIC HDWE ONLY
106	80"	44"	1 3/4"	D	HM		PNT	Main Level	14	F5	HM	PNT		UNDERCUT DOOR 1"
107	80"	44"	1 3/4"	D	HM		PNT	Main Level	15	F5	HM	PNT		UNDERCUT DOOR 1"

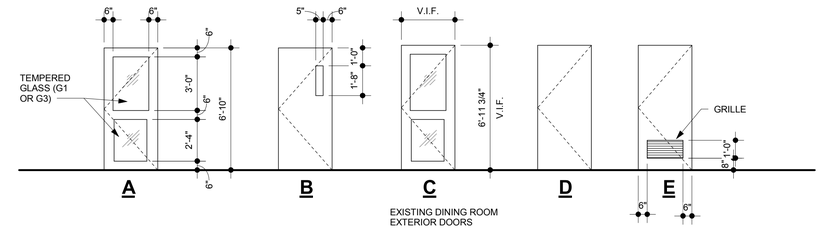

Door Types
1/4" = 1'-0"

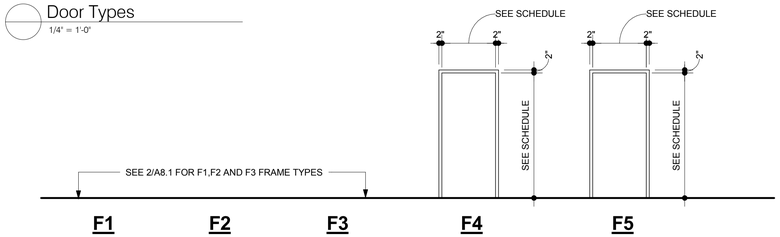

Frame Types
1/4" = 1'-0"

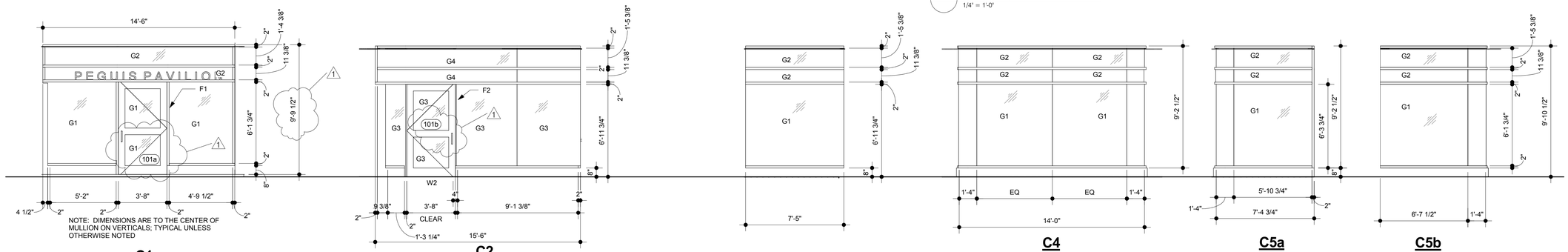

GLAZING LEGEND

G1 - 1" INSULATED GLASS - TEMPERED

G2 - 1" INSULATED GLASS

G3 - 1/4" TEMPERED GLASS

G4 - 1/4" GLASS

S1 - SPANDRAL PANEL

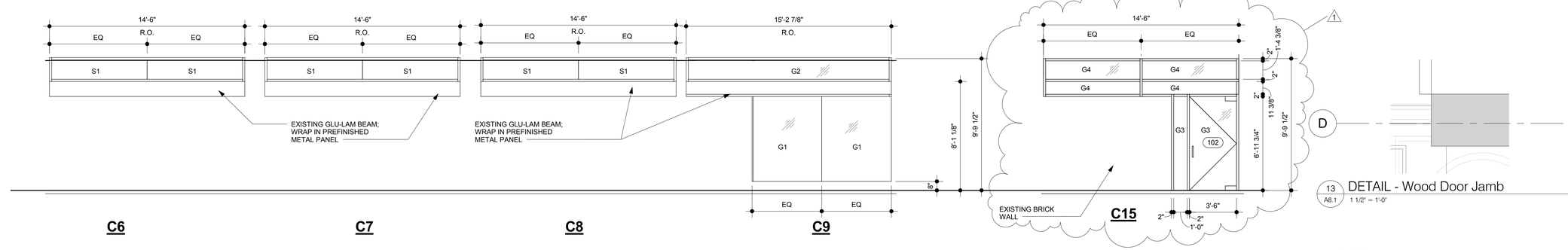

13 A8.1 DETAIL - Wood Door Jamb
1 1/2" = 1'-0"

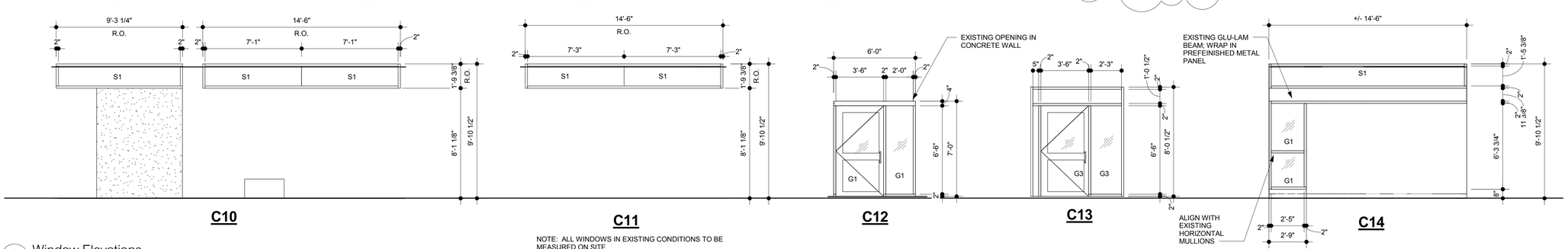

NOTE: ALL WINDOWS IN EXISTING CONDITIONS TO BE MEASURED ON SITE

2 A8.1 Window Elevations
1/4" = 1'-0"

THIS DRAWING MUST NOT BE SCALED.

THE GENERAL CONTRACTOR SHALL VERIFY ALL DIMENSIONS, DATUMS, AND LEVELS PRIOR TO COMMENCEMENT OF WORK. ALL ERRORS AND OMISSIONS TO BE REPORTED TO NUMBER TEN ARCHITECTURAL GROUP BEFORE PROCEEDING.

VARIATIONS AND MODIFICATIONS TO WORK SHOWN ON THESE DRAWINGS SHALL NOT BE CARRIED OUT WITHOUT WRITTEN PERMISSION OF NUMBER TEN ARCHITECTURAL GROUP.

THIS DRAWING IS THE EXCLUSIVE PROPERTY OF NUMBER TEN ARCHITECTURAL GROUP AND THE COPYRIGHT IN THE SAME BEING RESERVED TO THEM. IT MAY BE REPRODUCED ONLY WITH THE PERMISSION OF NUMBER TEN ARCHITECTURAL GROUP, IN WHICH CASE THE REPRODUCTION MUST BEAR THEIR NAME.

REVISION NO.	DESCRIPTION	REVISED/ ISSUED/ PLOTTED
1	Revision 1	March 8,2012

PRE-TENDER REVIEW SET

numberTEN architectural group
winnipeg MB 204 942.0981 regina SK 306 721.1501 victoria BC 250 360.2106
architecture • interior design • graphic design

project
Peguis Pavillon Upgrades and Entry Addition
Kildonan Park
Winnipeg, Manitoba, Canada

sheet title
Window and Door Elevations and Schedules

consultant

seal

drawn by:	Author	scale:	As indicated
checked by:	Checker	date:	March 3,2012
project no.	2011026	sheet no.	A8.1