SHEET: COW-A1 (05/2005)

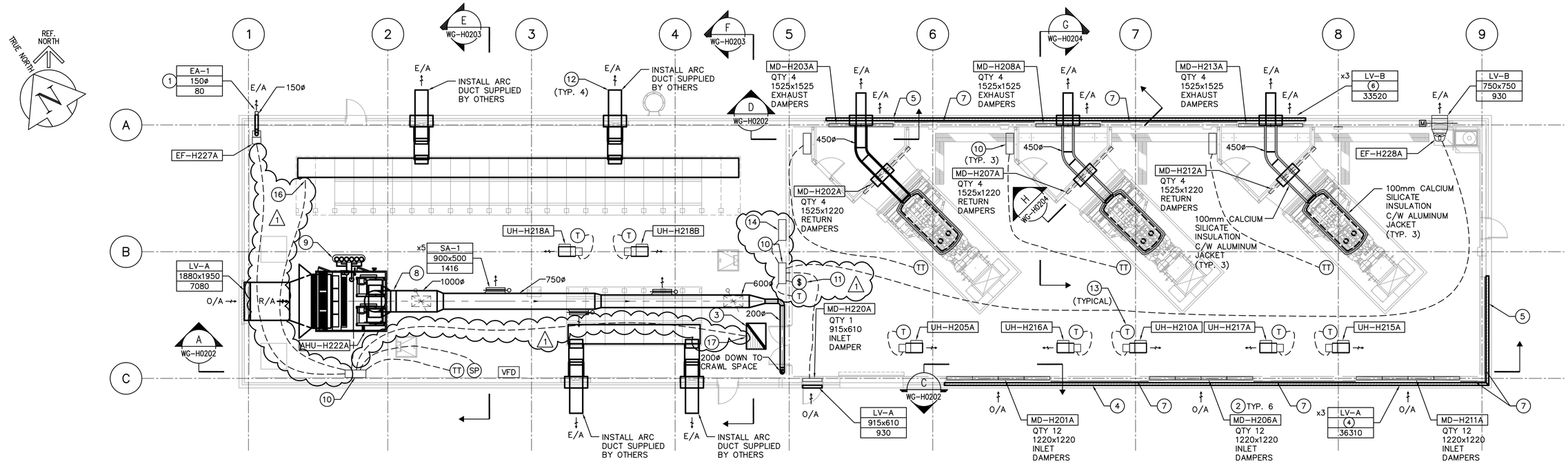

1 MAIN FLOOR VENTILATION PLAN
1:100

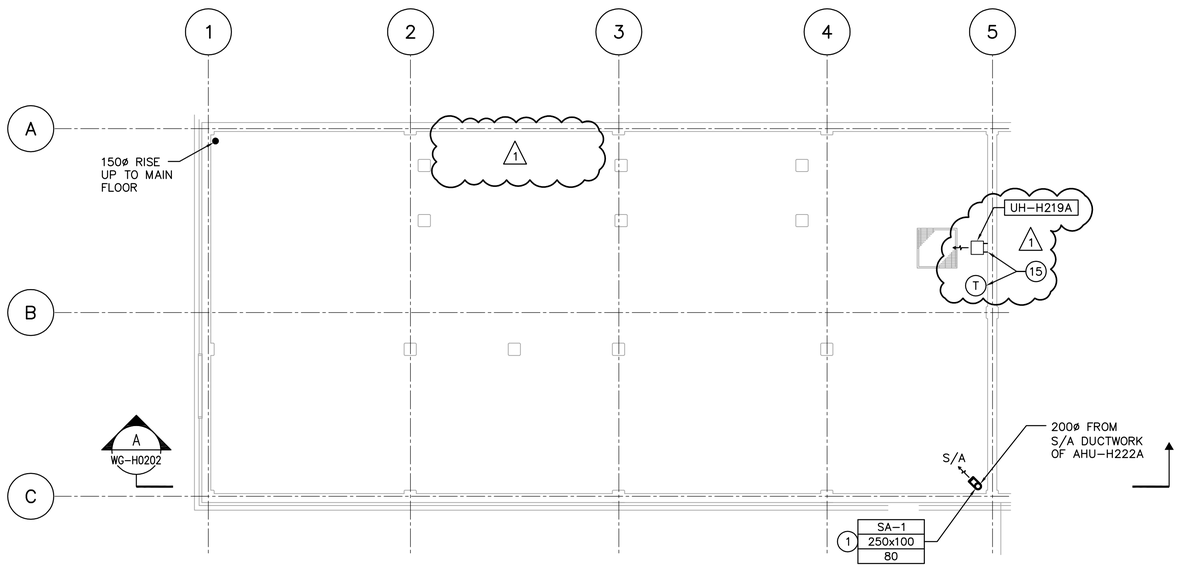

2 CRAWL SPACE VENTILATION PLAN
1:100

SCALE 1:100 METRES 0 2 4 6 8 10
SCALE 1:1 MILLIMETRES 0 20 40 60 80 100

DRAWING NOTES

1. 13mm SQUARE WIRE MESH WELDED TO END.
2. LOUVER AND DAMPER INSTALLATION SEE DRAWING WG-H0402 DETAIL 2.
3. 915x1220 RELIEF AIR DUCT RISING TO RELIEF AIR HOOD ON ROOF c/w BACK DRAFT DAMPER. TERMINATE INTAKE OPENING APPROX. 600mm BELOW ROOF DECK. BALANCE BACK DRAFT DAMPER TO ELECTRICAL ROOM PRESSURIZATION SETPOINT. SEE DRAWING WG-H0402 DETAIL 5.
4. CONTINUOUS LOUVER 3660 HIGHx25775 LONG, SEE ARCH DRAWING WG-B0301.
5. CONTINUOUS LOUVER 3660 HIGHx5175 LONG, SEE ARCH DRAWING WG-B0301.
6. CONTINUOUS LOUVER 3050 HIGHx22700 LONG, SEE ARCH DRAWING WG-B0301.
7. BLIND OUT WITH 16 GA GAVALIZED SHEET METAL.
8. INSULATE ALL SUPPLY AIR DUCT WITH 25mm FOIL FACED INSULATION.
9. EXTEND REFRIGERANT SUCTION, LIQUID AND HOT GAS PIPING UP THROUGH A ROOF COLLAR & BOOT TYPE SYSTEM TO CONDENSING UNITS. SEE WG-H401 DETAIL 6.
10. DDC (BAS) CONTROL PANEL WIRE TO UPS POWER PANEL (SEE DIV. 16 FOR CIRCUIT).
11. ONE HOUR MANUAL OVER-RIDE WIND-UP TIMER.
12. INSULATE ARC DUCT 400mm INTO BUILDING FROM PENETRATION TO OUTSIDE WITH 25MM FOIL FACED INSULATION.
13. THERMOSTAT TO BE MOUNTED ON R/A INLET TO UNIT HEATER.
14. DUPLEX SUMP CONTROL PANEL FOR SUMP PUMPS IN CRAWL SPACE.
15. UNIT HEATER AND THERMOSTAT TO BE WIRED UP TO CONTROL PANEL ABOVE.
16. CONTROL WIRING TO EF-H226A ON ROOF.
17. CONTROL WIRING TO MOTORIZED DAMPER IN GRAVITY HOOD.

GENERAL NOTES

1. COORDINATE WITH OTHER TRADES SO AS TO PREVENT CONFLICTS.
2. ALL DUCTWORK SHALL BE SUPPORTED AND SUPPENDED AS PER SPECIFICATIONS AND LOCAL CODES (SEE DETAILS).

APEGM
Certificate of Authorization
Earth Tech Canada Inc.
No. 730 Expiry: April 30, 2007

B.M. ELEV.

NO.	REVISIONS	DATE	BY
01	498-2006 ADDENDUM 3	06/09/28	DC
00	ISSUED FOR TENDER	06/08/28	LJW

CH2MHILL
Fredrickson Cooper ARCHITECTS
EarthTech A Tyco International Ltd. Company

DESIGNED BY	AB/LJW	CHECKED BY	AMA, PVL
DRAWN BY	LJW	APPROVED BY	AHL
SCALE:	1:100	RELEASED FOR CONSTRUCTION BY:	R. SOROKOWSKI
DATE	2006/05/29	DATE	2006/08/30

ENGINEER'S SEAL
ORIGINAL SIGNED BY
A. BURACHYNSKY
2006/08/30

CONSULTANT DRAWING NO.
WG-H0120

Winnipeg
THE CITY OF WINNIPEG
WATER AND WASTE DEPARTMENT
ENGINEERING DIVISION

WATER TREATMENT PLANT
STANDBY POWER GENERATOR

CITY FILE NUMBER
SHEET OF

MECHANICAL
VENTILATION PLAN

CITY DRAWING NUMBER
1-0601G-A-H0120-001-01D

Last Save: 2006-09-28 12:51 PM

\\CAWPGS01\DATA\WORK\79000\79538\02A-CAD\MEC\CONTR\GENSET\DN_WG-H0120_ET.DWG