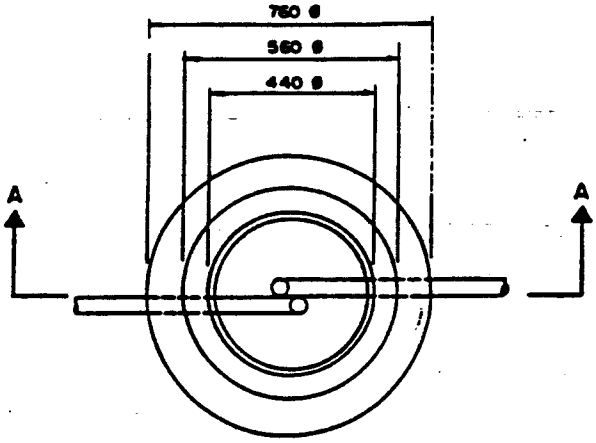

PLAN

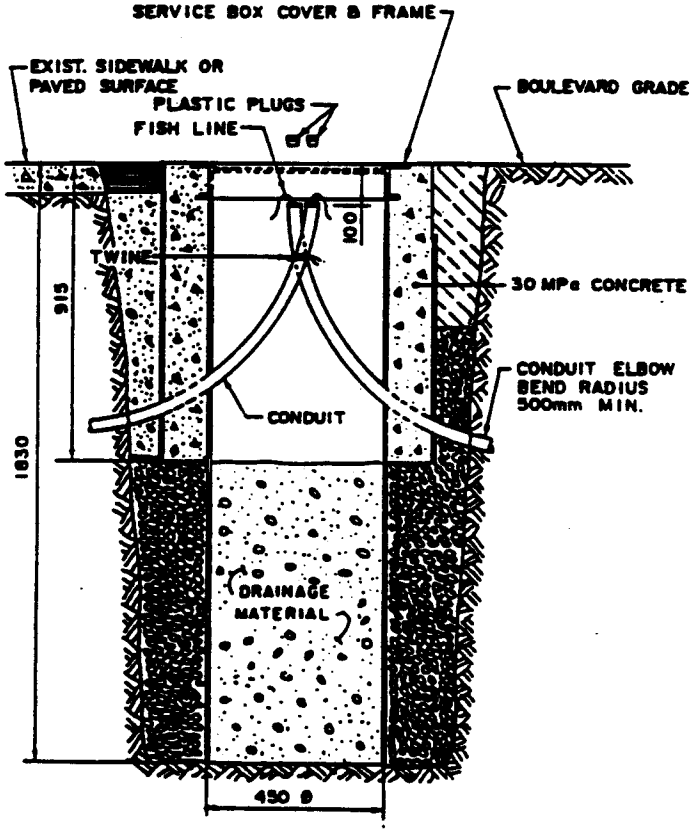

Notes:

1. Install 450 mm Ø inner forming tube to the bottom of the excavation. Fill the tube with drainage material, to within 915 mm of grade.

2. Ends of conduit shall be formed into elbows with 500 mm bend radius.

3. Install 760 mm Ø outer forming tube, concentric within the inner form and supported by the compacted backfill.

4. Backfill remainder of exterior excavation with:

   i) Cement stabilized fill in street pavement areas.

   ii) Cement stabilized fill where specified, otherwise with compacted granular material in bullnose, sidewalk and paved median areas.

   iii) Compacted granular fill overtopped with compacted excavated material in landscaped boulevard and median areas.

5. Install service box cover to be flush with pavement, sidewalk or boulevard finish grade.

6. Pour 30 MPa concrete to form service box walls. Trowel finish top of wall.

7. Terminate conduit ends within 100 mm of finish grade of service box cover.

8. After 24 hours minimum cure, remove outer forming tube to a depth of 150 mm below grade.

9. For backfill information, see details on "Standard Beddings and Backfills for Underground Traffic Signals Works, Drawing No. ST-101".

DIMENSIONS ARE IN MILLIMETRES

REVISIONS			
1	PLAN - DRAINAGE MATERIAL		
1	SECTION - DRAINAGE MATERIAL		
No.	DATE	DESCRIPTION	BY

The City Of Winnipeg
Works & Operations Division

Reference Std. No. CW 3620-R5

SERVICE BOX DETAIL

Designed By

Drawn By

Checked By

Date 89-04-12

App. Spec. P.

Scale N.T.S.

Drawing No. ST-49-A