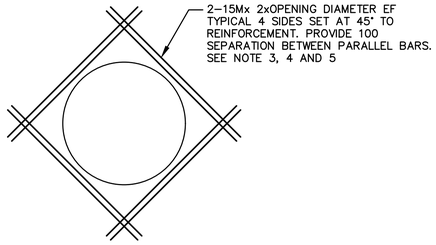

9 TYPICAL ROUND OPENING REINFORCING
SCALE: NOT TO SCALE

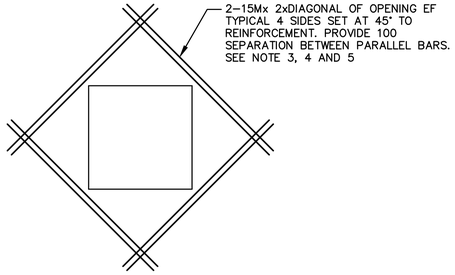

10 TYPICAL SQUARE OPENING REINFORCING
SCALE: NOT TO SCALE

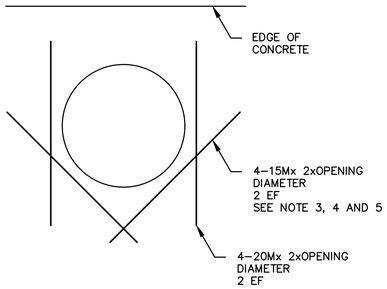

11 TYPICAL ROUND OPENING @ EDGE REINFORCING
SCALE: NOT TO SCALE

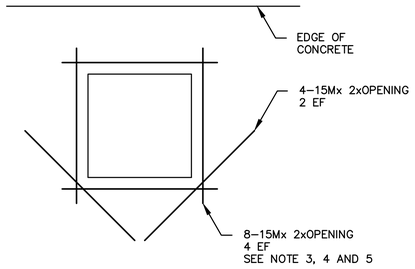

12 TYPICAL SQUARE OPENING @ EDGE REINFORCING
SCALE: NOT TO SCALE

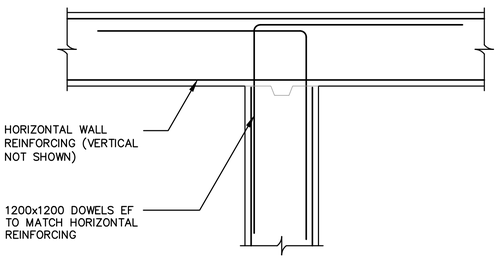

13 TYPICAL WALL INTERSECTION
SCALE: NOT TO SCALE

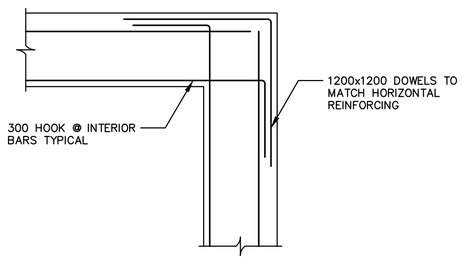

14 TYPICAL CORNER DETAIL
SCALE: NOT TO SCALE

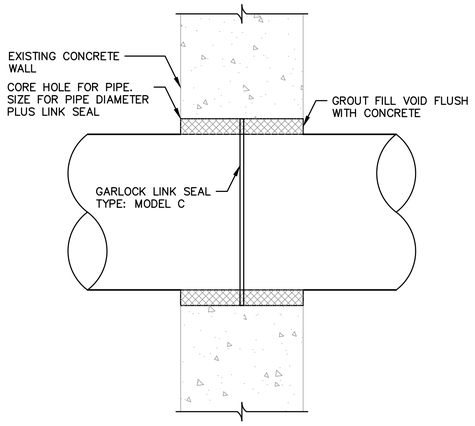

15 TYPICAL CONCRETE WALL PIPE PENETRATION
SCALE: NOT TO SCALE

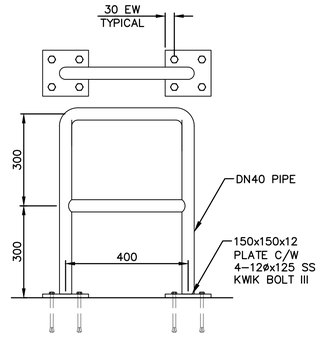

16 TYPICAL GRAB BAR
REF 1 SCALE: NOT TO SCALE

NOTES:
1. ALL ELEVATIONS ARE IN METERS AND ALL DIMENSIONS ARE IN MILLIMETRES UNLESS NOTED OTHERWISE.
2. ALL ALUMINUM IN CONTACT WITH CONCRETE TO HAVE 2–COATS BITUMEN.
3. FOR EACH BAR INTERRUPTED BY OPENING, IN THE PRIMARY REBAR DIRECTION ADD BAR TO EITHER SIDE OF OPENING. EXTEND BAR TO MINIMUM 900 PAST EACH EDGE OF OPENING. TYPICAL TOP AND BOTTOM. ALLOW MINIMUM 40 SPACING BETWEEN BARS TYPICAL FOR ALL OPENINGS.
4. TYPICAL REINFORCING DETAILS FOR OPENINGS APPLY TO ALL OPENINGS GREATER OR EQUAL TO 200ø FOR SLAB, 100ø FOR WALLS. UNLESS NOTED OTHERWSE IN NOTE 5.
5. FOR OPENINGS THAT ARE SPACED CLOSER THAN OR EQUAL TO 600 PROVIDE OPENING REINFORCING AS IF IT IS ONE PENETRATION.
6. ALL INTERIOR MEMBERS TO BE STRUCTURAL ALUMINUM ALLOY 6061–T6. EXTERIOR TO BE STEEL UNLESS NOTED OTHERWISE.
7. COORDINATE SIZE AND LOCATION OF OPENINGS THROUGH SLAB AND GRATING WITH MECHANICAL AND PROCESS PLANS.

NO.	DRAWING NUMBER	REFERENCE DRAWING TITLE
10		
9		
8		
7		
6		
5		
4		
3		
2		
1		

REFERENCE DRAWINGS

METRIC
WHOLE NUMBERS INDICATE MILLIMETRES
DECIMALIZED NUMBERS INDICATE METRES
UNLESS OTHERWISE NOTED

ENGINEERS GEOSCIENTISTS MANITOBA
Certificate of Authorization
MPE, A DIVISION OF ENGLOBE CORP.
No. 4968

B.M.
ELEV.

NO.	REVISIONS	DATE	BY
0	ISSUED FOR CONSTRUCTION	2024.03.18	

MPE a division of Englobe

DESIGNED BY	M. BAKER	CHECKED BY	B. BAKER
DRAWN BY	D. MCMILLAN	APPROVED BY	M. BAKER
SCALE: HORIZONTAL VERTICAL	AS SHOWN	RELEASED FOR CONSTRUCTION	
DATE	2024–03–18	DATE	

PLOT DATE: 2024 03 18

PROVINCE OF MANITOBA
M.J. BAKER
Member
43540
REGISTERED PROFESSIONAL ENGINEER
MARCH 18, 2024
CONSULTANT DRAWING NUMBER

BID OPPORTUNITY: --

Winnipeg
THE CITY OF WINNIPEG
WATER AND WASTE DEPARTMENT
ENGINEERING DIVISION

RENFREW OUTFALL GATE CHAMBER
2024 UPGRADES
STRUCTURAL DETAILS

CITY DRAWING NUMBER 1–0240G–S007–001
SHEET 10 OF 41

FILE PATH: M:\N-Data\84\00 City of Winnipeg\006 – Renfrew Outfall Gate Chamber Upgrades\AutoDesk\ACAD\
FILE NAME: s4.1 – s4.3 details.dwg