NOTES:
1. ALL ELEVATIONS ARE IN METERS AND ALL DIMENSIONS ARE IN MILLIMETRES UNLESS NOTED OTHERWISE.
2. INSTALL 50 RIGID INSULATION ON CEILINGS, WALLS, AND UNDERSIDES OF HATCHES IN UPPER LEVEL OF THE PUMP CHAMBER.
3. MODIFY EXISTING LADDER BRACKETS TO ALLOW FOR MINIMUM 178 CLEARANCE TO INSULATION.
4. INSTALL NEW LADDER TO MATCH CLEARANCE OF THE UPPER LEVEL LADDER OF THE PUMP CHAMBER.

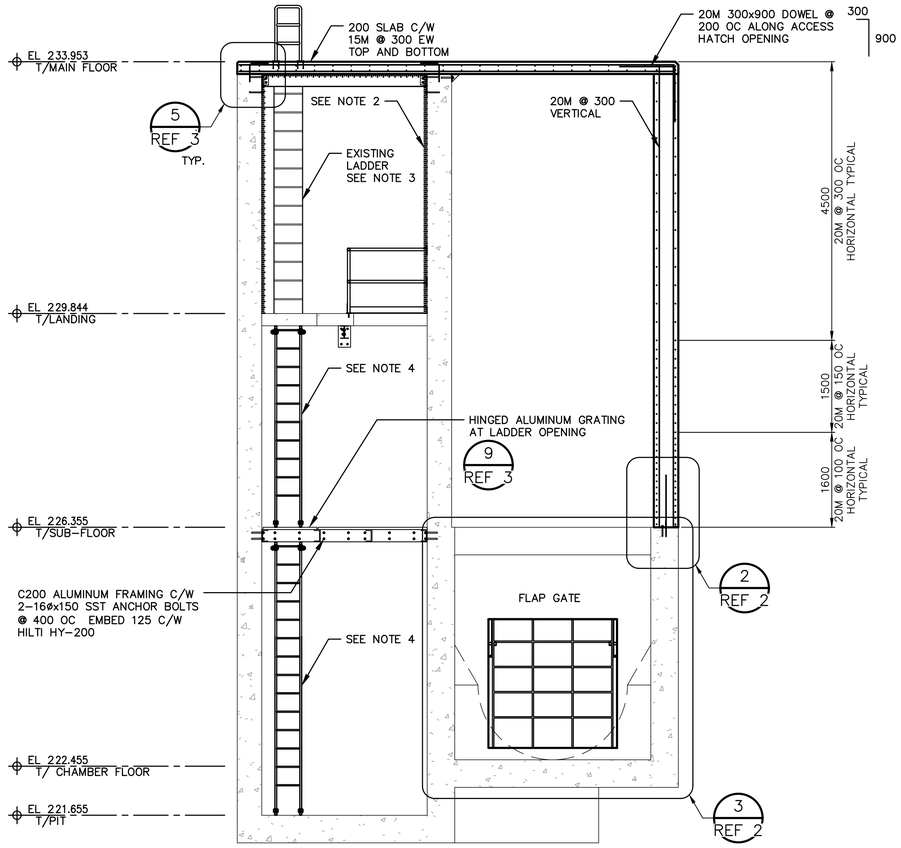

C BUILDING SECTION
REF 1 SCALE: 1:50

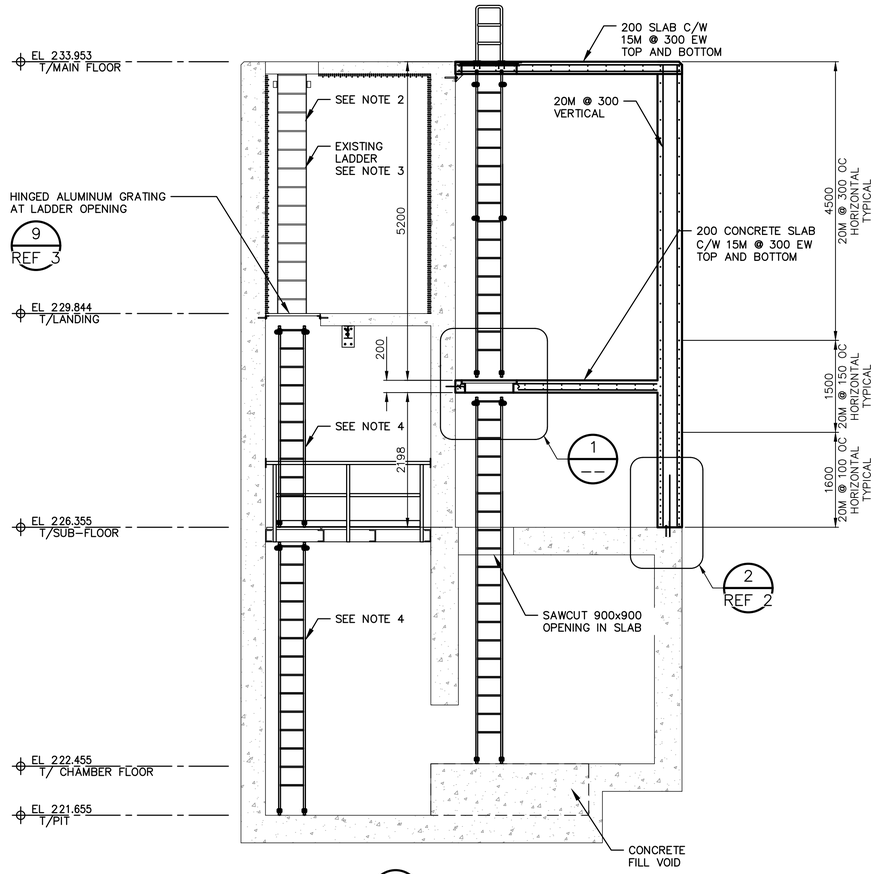

D BUILDING SECTION
REF 1 SCALE: 1:50

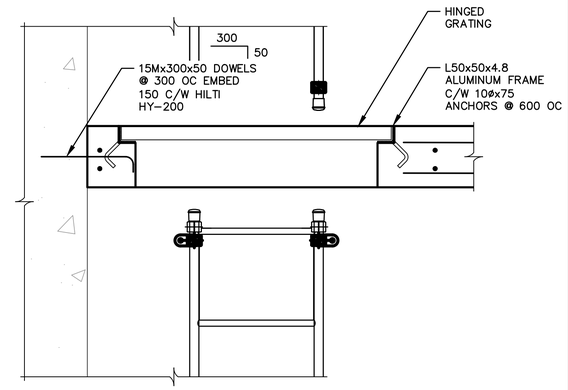

NOTE: PROVIDE 2-COATS OF BITUMEN PAINT ON ALL ALUMINUM SURFACES IN CONTACT WITH CONCRETE

1 REMOVABLE GRATING DETAIL
-- SCALE: 1:10

THE INFORMATION CONTAINED IN THESE DRAWINGS SHALL BE ORIENTED IN THE SAME DATUM AS THE GIS, NAD 1983 JUNE 1990.

NO.	DRAWING NUMBER	REFERENCE DRAWING TITLE
10		
9		
8		
7		
6		
5		
4		
3	1-0240G-S006-001	STRUCTURAL DETAILS
2	1-0240G-S005-001	STRUCTURAL DETAILS
1	1-0240G-S002-001	STRUCTURAL PLANS

REFERENCE DRAWINGS

0 1000 2000 3000 4000 5000
SCALE: 1:50

METRIC
WHOLE NUMBERS INDICATE MILLIMETRES
DECIMALIZED NUMBERS INDICATE METRES
UNLESS OTHERWISE NOTED

ENGINEERS GEOSCIENTISTS MANITOBA
Certificate of Authorization
MPE, A DIVISION OF ENGLOBE CORP.
No. 4968

B.M.
ELEV.

NO.	REVISIONS	DATE	BY
0	ISSUED FOR CONSTRUCTION	2024.03.18	

MPE a division of Englobe

DESIGNED BY	M. BAKER	CHECKED BY	B. BAKER
DRAWN BY	D. MCMILLAN	APPROVED BY	M. BAKER
SCALE: HORIZONTAL VERTICAL	AS SHOWN	RELEASED FOR CONSTRUCTION	
DATE	2024-03-18	DATE	

PLOT DATE: 2024 03 18

PROVINCE OF MANITOBA
M.J. BAKER
Member
43540
REGISTERED PROFESSIONAL ENGINEER
MARCH 18, 2024
CONSULTANT DRAWING NUMBER

BID OPPORTUNITY: --

Winnipeg
THE CITY OF WINNIPEG
WATER AND WASTE DEPARTMENT
ENGINEERING DIVISION

RENFREW OUTFALL GATE CHAMBER
2024 UPGRADES
STRUCTURAL SECTIONS

CITY DRAWING NUMBER 1-0240G-S004-001 SHEET 7 OF 41

FILE PATH: M:\N-Data\84\00 City of Winnipeg\006 - Renfrew Outfall Gate Chamber Upgrades\AutoDesk\ACAD\
FILE NAME: S3.2 Sections.dwg