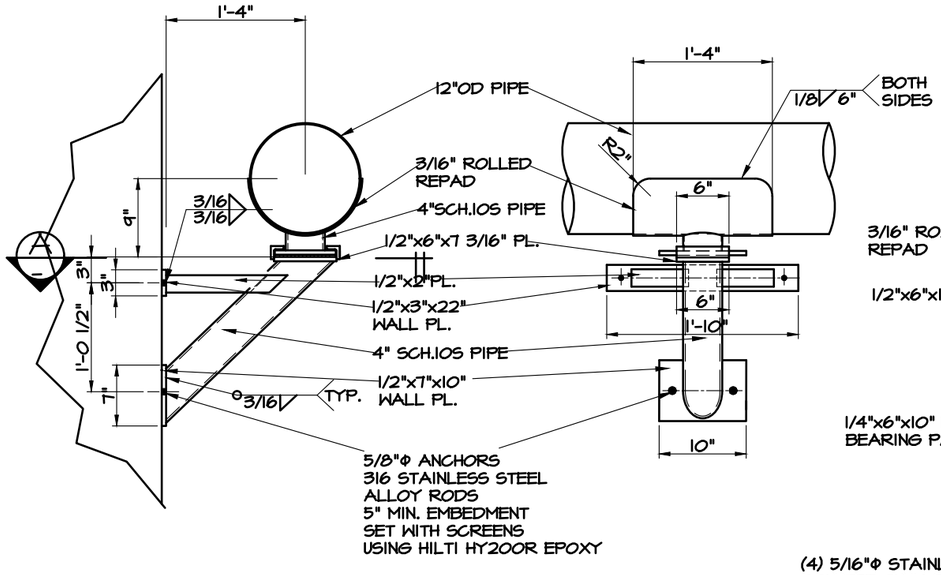

TYPICAL HORIZONTAL SLIDING SUPPORT

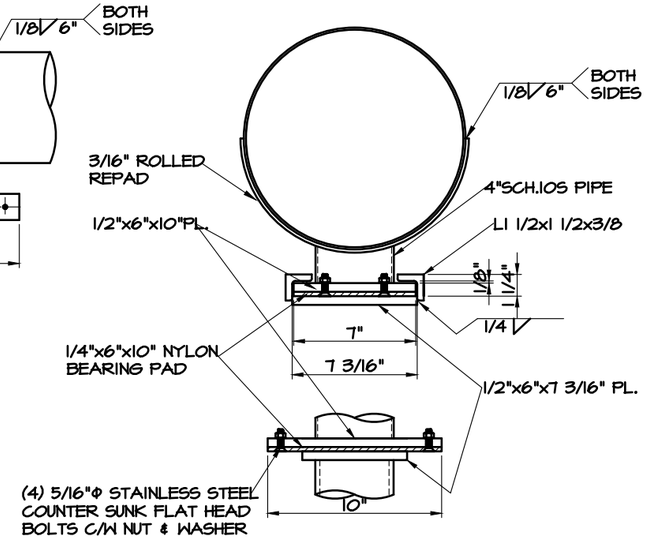

TYPICAL SLIDING DETAIL

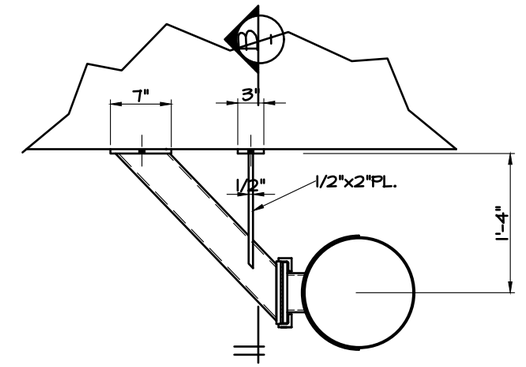

TYPICAL VERTICAL SLIDING SUPPORT

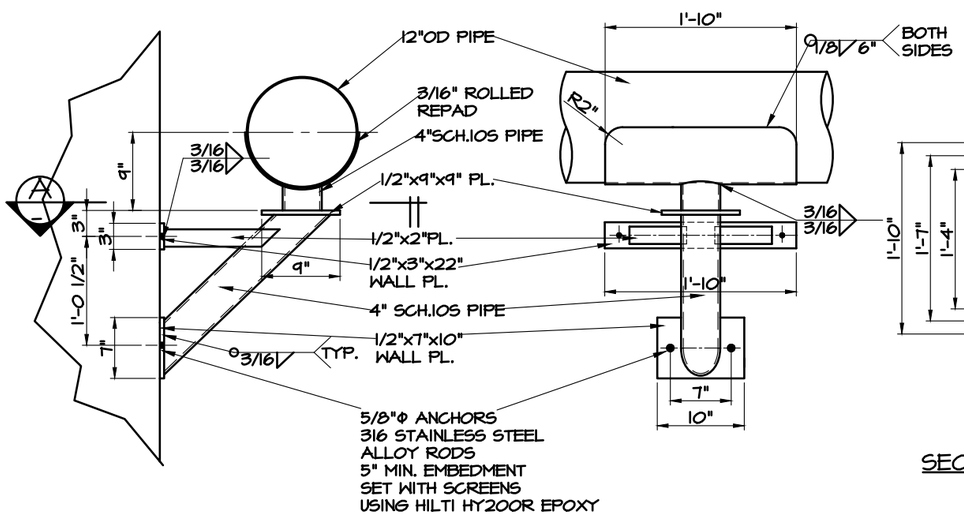

TYPICAL FIXED SUPPORT

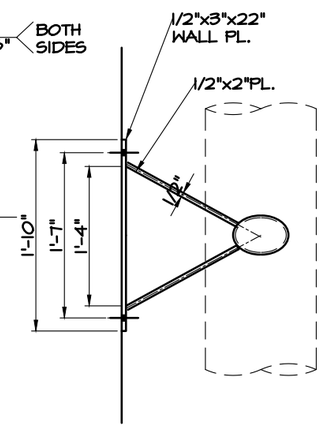

SECTION-A

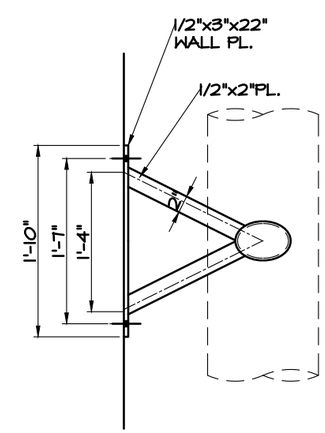

SECTION-B

WALL SUPPORTS

1. WALL ANCHORS DESIGNED TO SUPPORT THE FLOODED WEIGHT AND EMPTY BUOYANCY OF 12" DIAMETER STAINLESS STEEL TUBING.
2. SLIDING SUPPORTS PROVIDE SUPPORT WHILE ACCOMODATING THERMAL EXPANSION AND CONTRACTION CYCLES FROM THE OPERATION OF THE BLOWER SYSTEM.
3. THE POSITION OF SLIDING ANCHORS SHALL BE SET BASED ON THE INSTALLATION TEMPERATURE SO THAT AT NOMINAL 21°C (70°F) THEY ARE AT THE MID POINT OF TRAVEL.
4. FIXED ANCHORS ARE DESIGNED TO RESTRAIN MOVEMENT FROM THERMAL EXPANSION AND CONTRACTION TO PROTECT ADJACENT COMPONENTS.
5. ALL COMPONENTS SHALL BE STAINLESS STEEL ALLOY 316 OR 316L. PLATES OR BARS TO ASTM A240, PIPE TO ASTM A312.
6. WELDING TO CSA STANDARD W47.1 ANNEX K AND/OR AWS D1.6.
7. WELDING ELECTRODES TO BE ALLOY 316L.
8. SLIDING BEARING PADS SHALL BE NYLON FASTENED TO THE SLIDING PLATE SURFACE WITH ¼ INCH MINIMUM COUNTERSUNK BOLTS, STAINLESS STEEL ALLOY 316.

B.M.
ELEV.

COSTRUCTION COMPLETION DATE: YYYY MM DD

NO.	REVISIONS	DATE	BY
0	ISSUED FOR TENDER 85-2023	2023 03 10	JC

F.A. Roberts & Associates Ltd.
Engineering Consultants
1304 Border St. | Winnipeg, MB | R3H 0M6 | Ph. (204) 694-4600

DESIGNED BY	FAR	CHECKED BY	FAR
DRAWN BY	JC	APPROVED BY	FAR
SCALE: HORIZONTAL VERTICAL		RELEASED FOR CONSTRUCTION	
DATE	2023 03 10	DATE	

PLOT DATE: 2023 03 10

ENGINEER'S SEAL

CONSULTANT DRAWING NUMBER
2022187–P5

BID OPPORTUNITY: XXX-20XX
CONTRACT NUMBER: X

FILE PATH: P:\2022 Project Folder\2022187\
FILE NAME: 2022187.dwg

Winnipeg

THE CITY OF WINNIPEG

WATER AND WASTE DEPARTMENT
ENGINEERING DIVISION

2023 NEWPCC SBR UPGRADES
SBR TANK No.2 PIPING
NEW PIPE SUPPORT BRACKETS

SHEET 5 OF 6

CITY DRAWING NUMBER
85-2023
_DRAWING
_2022187_P5-R0