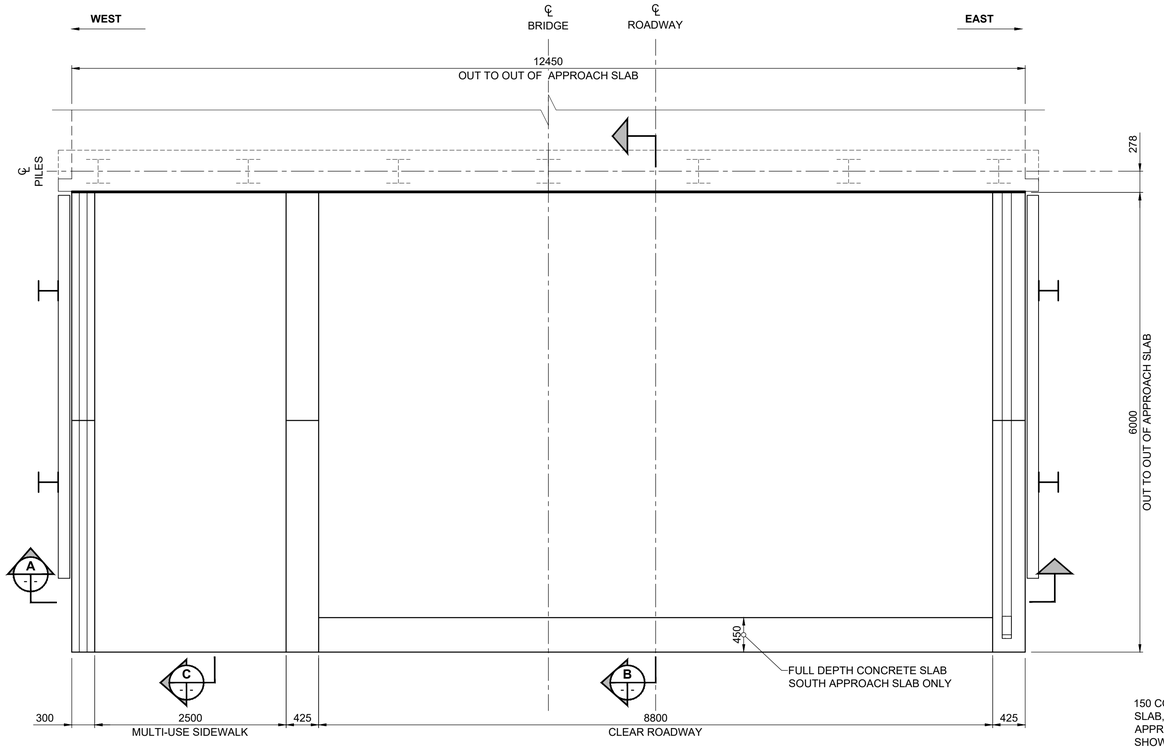

APPROACH PLAN VIEW

SCALE: 1:40

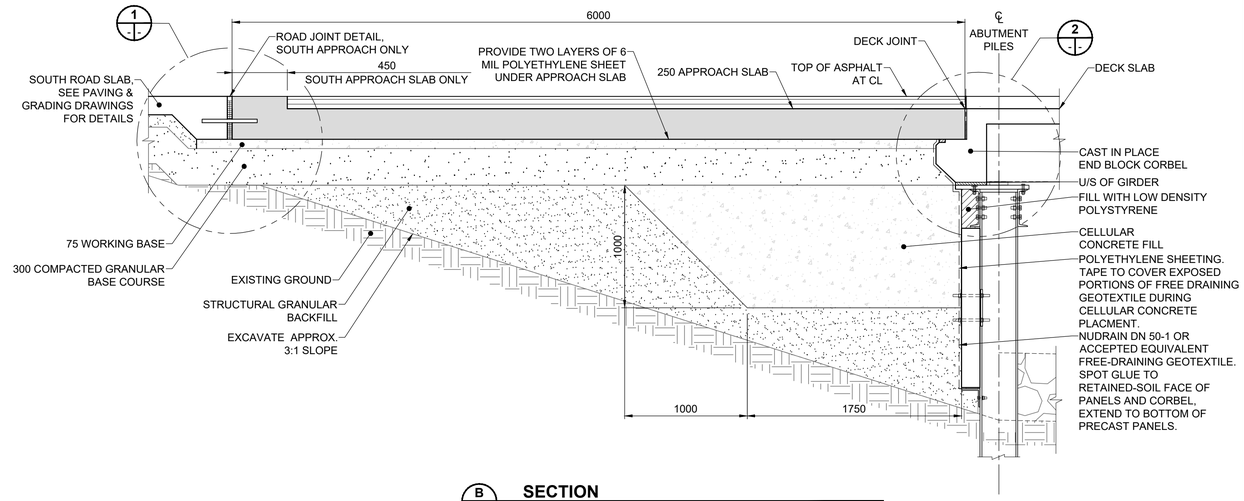

SECTION

SOUTH APPROACH SHOWN, NORTH APPROACH SIMILAR

SCALE: 1:25

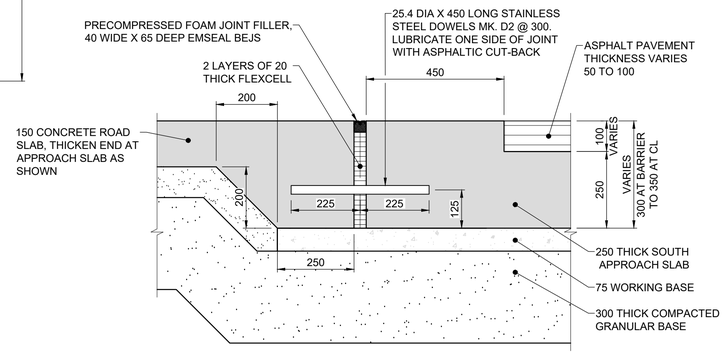

DETAIL

SOUTH APPROACH

SCALE: 1:10

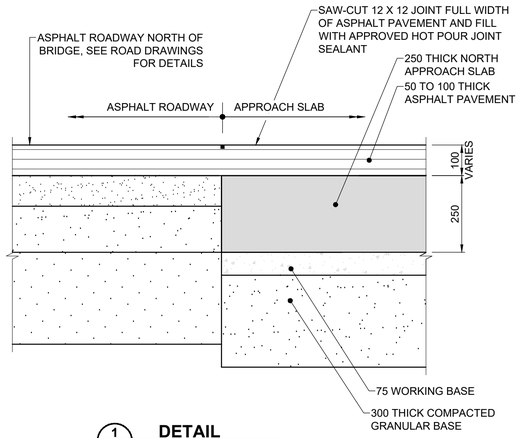

DETAIL

NORTH APPROACH

SCALE: 1:10

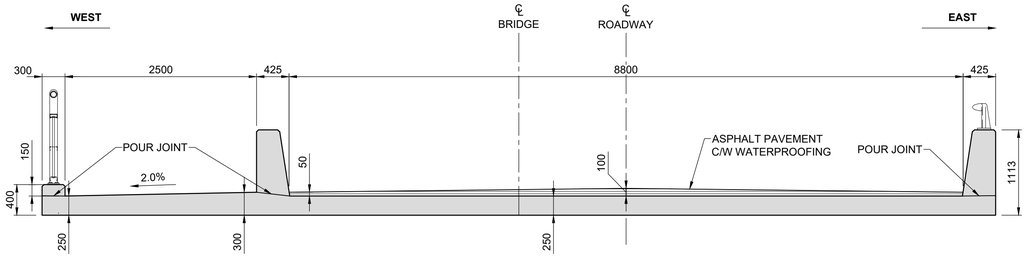

SECTION

SCALE 1:40

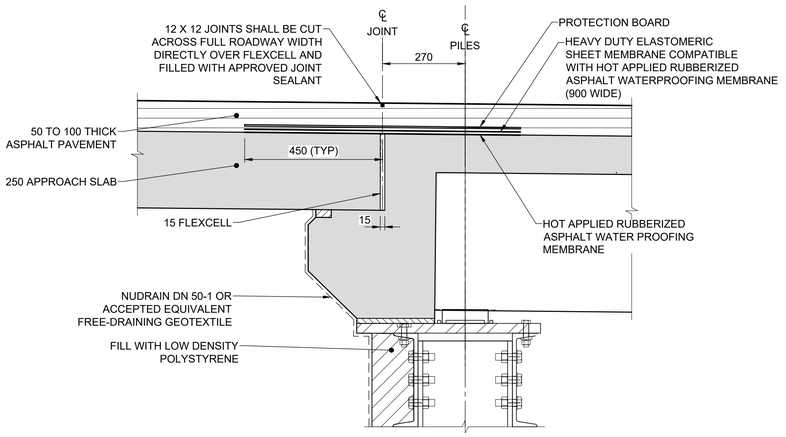

DETAIL

SU1 JOINT SHOWN, SU4 SIMILAR

SCALE 1:10

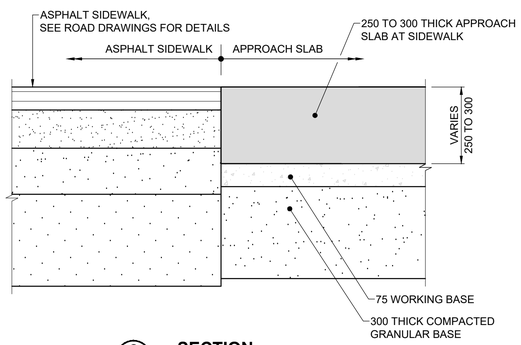

SECTION

NORTH AND SOUTH SIDEWALK

SCALE: 1:10

NOTE: SEE SHEET 2 FOR STEEL DOWEL SCHEDULE

ENGINEERS GEOSCIENTISTS MANITOBA
Certificate of Authorization
MORRISON HERSHFIELD
No. 1736

TENDER No. 335-2023

LOCATION APPROVED
UNDERGROUND STRUCTURES

SUPR. U/G STRUCTURES COMMITTEE — DATE

NOTE:
LOCATION OF UNDERGROUND STRUCTURES AS SHOWN ARE BASED ON THE BEST INFORMATION AVAILABLE BUT NO GUARANTEE IS GIVEN THAT ALL EXISTING UTILITIES ARE SHOWN OR THAT THE GIVEN LOCATIONS ARE EXACT. CONFIRMATION OF EXISTENCE AND EXACT LOCATION OF ALL SERVICES MUST BE OBTAINED FROM THE INDIVIDUAL UTILITIES BEFORE PROCEEDING WITH CONSTRUCTION.

BM 78-009 N.W. Cor. Paddington Rd. & Dakota St., 19 mm dia. x 6.1 m I.B. in Valve Box, 5.5 m S. of N.L. Paddington Rd. & on W.L. of Dakota St., in traffic island.
ELEV 232.749 m

No.	REVISIONS	YY/MM/DD	BY
C	ISSUED FOR TENDER	23/08/02	BAP
B	ISSUED FOR 95% REVIEW	23/06/27	BAP
A	ISSUED FOR 50% REVIEW	23/04/14	BAP

MORRISON HERSHFIELD

DESIGNED BY	ALP	CHECKED BY	AGG
DRAWN BY	AS	APPROVED BY	BAP
HOR SCALE	AS SHOWN	RELEASED FOR CONSTRUCTION	
VERT SCALE	AS SHOWN		
DATE	JUNE 27, 2023	DATE	

PROFESSIONAL'S SEAL
PROVINCE OF MANITOBA
A.D.G. GILARSKI
Member
32144
2023-08-02
REGISTERED PROFESSIONAL ENGINEER

CONSULTANT FILE NAME
2203665-CBR DD-APPROACH01.dwg

Winnipeg
THE CITY OF WINNIPEG
PUBLIC WORKS DEPARTMENT
ENGINEERING DIVISION

CREEK BEND ROAD BRIDGE REPLACEMENT AND RELATED WORKS

APPROACH SLAB LAYOUT AND CONCRETE DETAILS

CITY DRAWING NUMBER: B149-23-35
SHEET 35 OF 52
DRAWING NUMBER: 35

METRIC
WHOLE NUMBERS INDICATE MILLIMETRES
DECIMALIZED NUMBERS INDICATE METRES

ISO A1 - 594mm x 841mm
X:\Proj\2022\2203665\0-Cs\fW 293-2022 Creek Bend Road Bri\09_CAD\07 Sheets\Structural\Detailed Design\2203665-CBR DD-APPROACH01.dwg Last Saved: 8/2/2023 4:43 PM by AHeppner Plotted: 8/2/2023 4:44 PM by Alex Heppner