ISO A1 - 594mm x 841mm

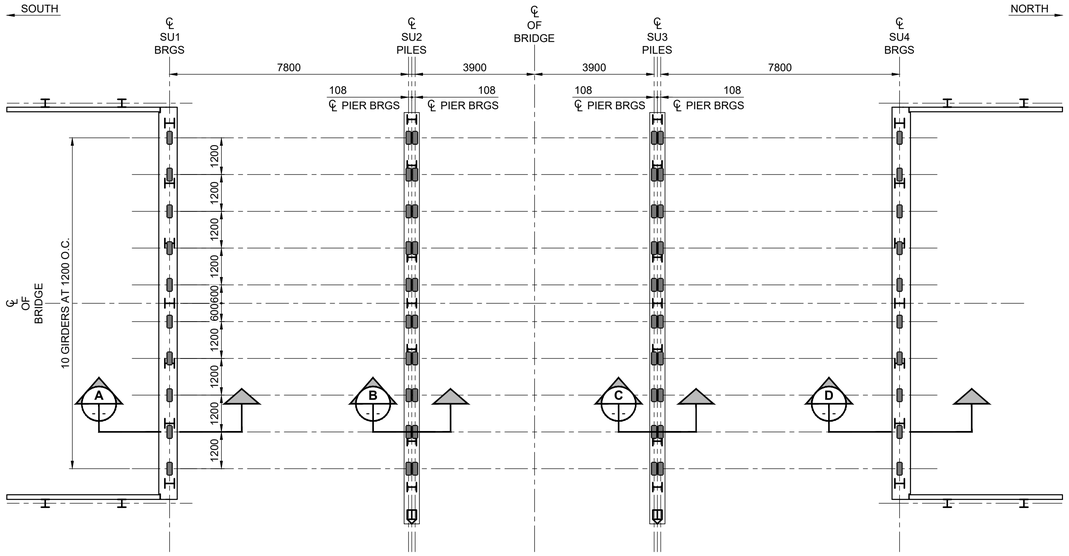

BEARING LAYOUT PLAN VIEW

SCALE: 1:100

BEARING DESIGN LOADS

LOCATION	SLS DESIGN					ULS DESIGN					
	VERTICAL		LONGITUDINAL	TRANSVERSE	LIVE LOAD ROTATIONS	VERTICAL		LONGITUDINAL	TRANSVERSE	LIVE LOAD ROTATIONS	LONGITUDINAL MOVEMENT
	DEAD	TOTAL	TOTAL	TOTAL		DEAD	TOTAL	TOTAL	TOTAL		
	kN	kN	kN	kN	RADIANS	kN	kN	kN	kN	RADIANS	mm
ABUTMENT	93	268	0	0	0.0022	112	410	0	0	0.0037	±14
PIER	58	219	0	0	0.0022	69	339	0	0	0.0037	0

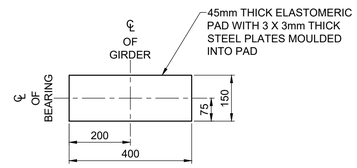

PLAN

SCALE 1:10

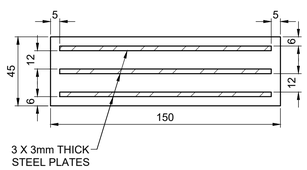

CROSS SECTION

SCALE 1:2

ELASTOMERIC BEARINGS

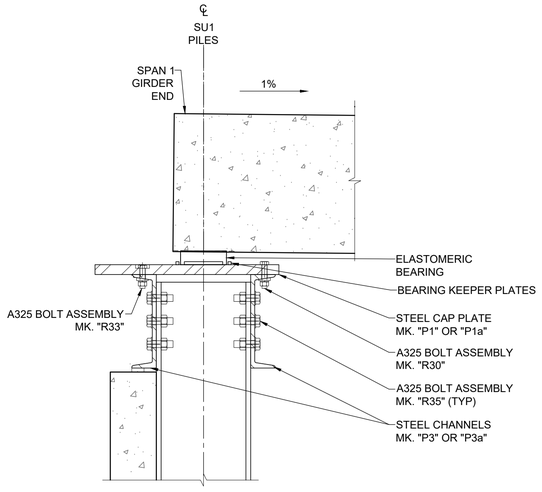

A SECTION

SCALE 1:10

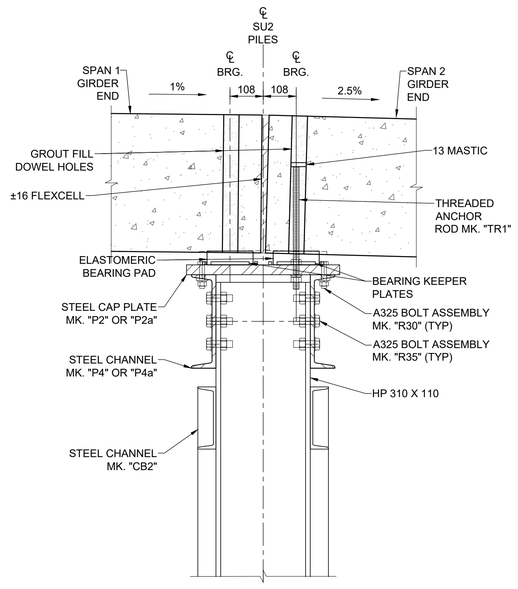

B SECTION

SCALE 1:10

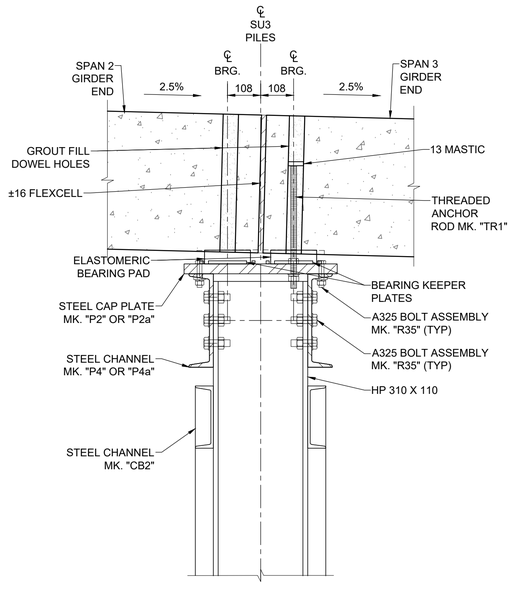

C SECTION

SCALE 1:10

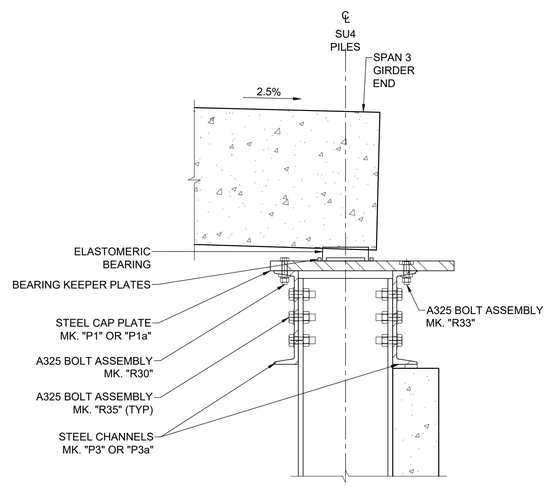

D SECTION

SCALE 1:10

ENGINEERS GEOSCIENTISTS MANITOBA
Certificate of Authorization
MORRISON HERSHFIELD
No. 1736

TENDER No. 335-2023

NOTE: SEE SHEET 2 FOR STEEL BOLT HARDWARE SCHEDULE.

LOCATION APPROVED
UNDERGROUND STRUCTURES

SUPR. U/G STRUCTURES COMMITTEE — DATE

NOTE:
LOCATION OF UNDERGROUND STRUCTURES AS SHOWN ARE BASED ON THE BEST INFORMATION AVAILABLE BUT NO GUARANTEE IS GIVEN THAT ALL EXISTING UTILITIES ARE SHOWN OR THAT THE GIVEN LOCATIONS ARE EXACT. CONFIRMATION OF EXISTENCE AND EXACT LOCATION OF ALL SERVICES MUST BE OBTAINED FROM THE INDIVIDUAL UTILITIES BEFORE PROCEEDING WITH CONSTRUCTION.

BM 78-009 ELEV 232.749 m — N.W. Cor. Paddington Rd. & Dakota St., 19 mm dia. x 6.1 m l.B. in Valve Box, 5.5 m S. of N.L. Paddington Rd. & on W.L. of Dakota St., in traffic island.

No.	REVISIONS	YY/MM/DD	BY
C	ISSUED FOR TENDER	23/08/02	BAP
B	ISSUED FOR 95% REVIEW	23/06/27	BAP
A	ISSUED FOR 50% REVIEW	23/04/14	BAP

MORRISON HERSHFIELD

DESIGNED BY	AGG	CHECKED BY	BAP
DRAWN BY	AS	APPROVED BY	BAP
HOR SCALE	AS SHOWN	RELEASED FOR CONSTRUCTION	
VERT SCALE	AS SHOWN		
DATE	JUNE 27, 2023	DATE	

PROFESSIONAL'S SEAL
PROVINCE OF MANITOBA — A.D.G. GILARSKI — Member 32144 — 2023-06-02 — REGISTERED PROFESSIONAL ENGINEER

CONSULTANT FILE NAME
2203665-CBR DD-BEARINGS.dwg

Winnipeg

THE CITY OF WINNIPEG
PUBLIC WORKS DEPARTMENT
ENGINEERING DIVISION

CREEK BEND ROAD BRIDGE REPLACEMENT AND RELATED WORKS

BEARING LAYOUT AND DETAILS

CITY DRAWING NUMBER: B149-23-22
SHEET 22 OF 52
DRAWING NUMBER: 22

METRIC
WHOLE NUMBERS INDICATE MILLIMETRES
DECIMALIZED NUMBERS INDICATE METRES

X:\Proj\2022\2203665\00-CstW 293-2022 Creek Bend Road Br\09. CAD\07 Sheets\Structural\Detailed Design\2203665-CBR DD-BEARINGS.dwg Last Saved: 8/2/2023 4:33 PM by AHeppner Plotted: 8/2/2023 4:35 PM by Alex Heppner