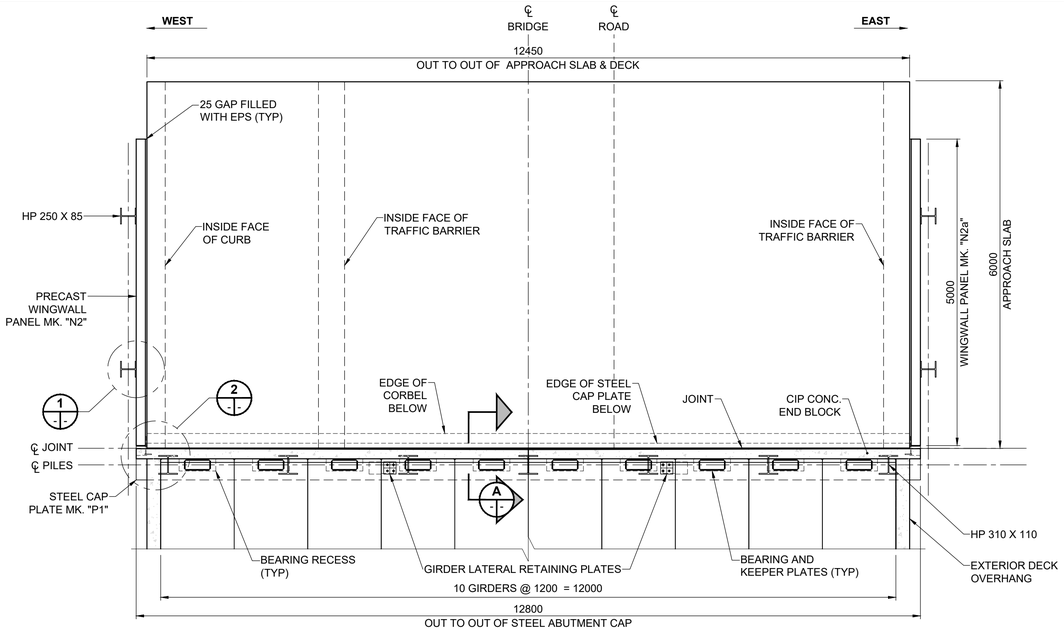


## ABUTMENT PLAN VIEW

SHOWING SU4 ABUTMENT (SU1 MIRRORED)

SCALE: 1:50

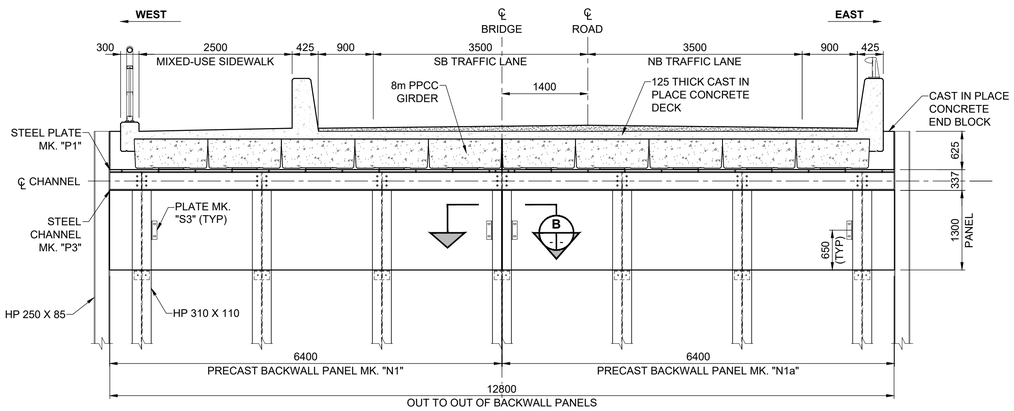


## ABUTMENT FRONT VIEW

SCALE: 1:50

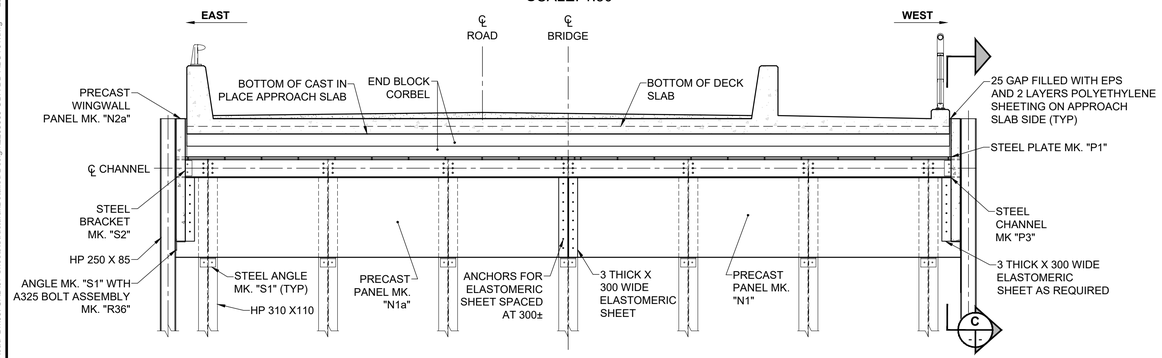


## ABUTMENT BACK VIEW

SCALE: 1:50

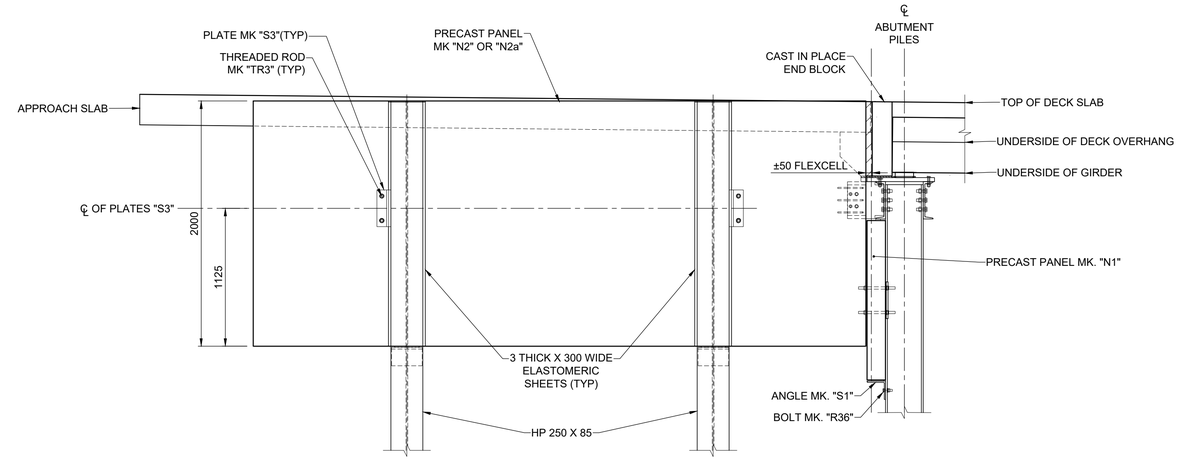


## WINGWALL ELEVATION

CURB/BARRIER NOT SHOWN FOR CLARITY

SCALE: 1:25

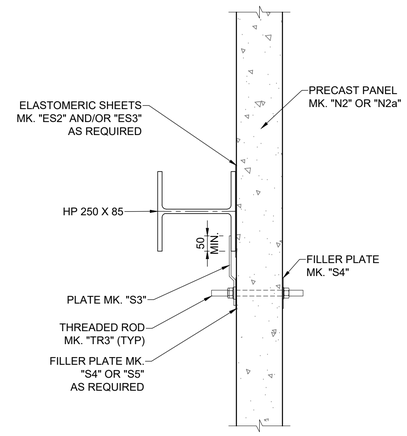


1 **DETAIL**

SCALE: 1:10

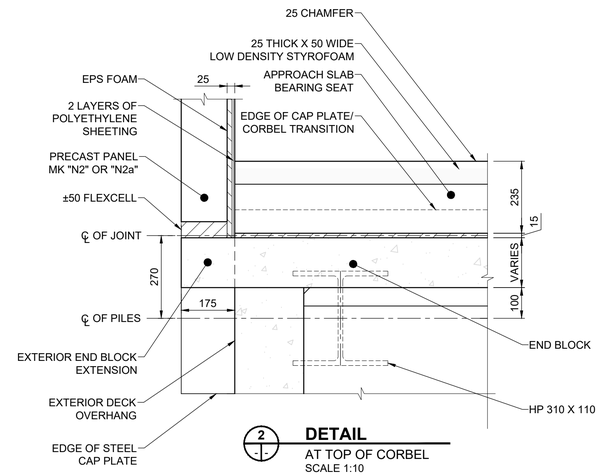


2 **DETAIL**

AT TOP OF CORBEL

SCALE 1:10

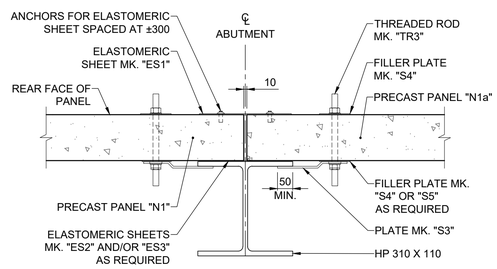


B **SECTION**

SCALE: 1:10

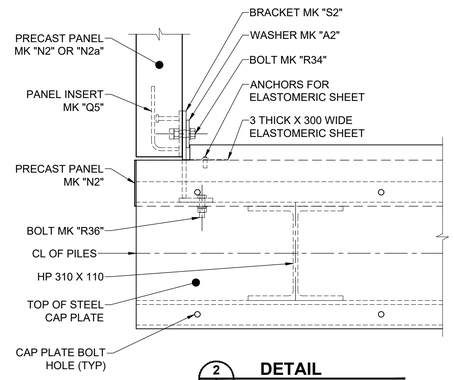


2 **DETAIL**

AT TOP OF CAP PLATE

SCALE 1:10

ENGINEERS GEOSCIENTISTS MANITOBA
Certificate of Authorization
MORRISON HERSHFIELD
No. 1736

TENDER No. 335-2023

METRIC
WHOLE NUMBERS INDICATE MILLIMETRES
DECIMALIZED NUMBERS INDICATE METRES

LOCATION APPROVED
UNDERGROUND STRUCTURES

SUPR. U/G STRUCTURES COMMITTEE — DATE

**NOTE:**
LOCATION OF UNDERGROUND STRUCTURES AS SHOWN ARE BASED ON THE BEST INFORMATION AVAILABLE BUT NO GUARANTEE IS GIVEN THAT ALL EXISTING UTILITIES ARE SHOWN OR THAT THE GIVEN LOCATIONS ARE EXACT. CONFIRMATION OF EXISTENCE AND EXACT LOCATION OF ALL SERVICES MUST BE OBTAINED FROM THE INDIVIDUAL UTILITIES BEFORE PROCEEDING WITH CONSTRUCTION.

BM 78-009 — N.W. Cor. Paddington Rd. & Dakota St., 19 mm dia. x 6.1 m I.B. in Valve Box, 5.5 m S. of N.L. Paddington Rd. & on W.L. of Dakota St., in traffic island
ELEV 232.749 m

| No. | REVISIONS | YY/MM/DD | BY |
|---|---|---|---|
| C | ISSUED FOR TENDER | 23/08/02 | BAP |
| B | ISSUED FOR 95% REVIEW | 23/06/27 | BAP |
| A | ISSUED FOR 50% REVIEW | 23/04/14 | BAP |

MORRISON HERSHFIELD

| | | | |
|---|---|---|---|
| DESIGNED BY | ALP | CHECKED BY | AGG |
| DRAWN BY | AS | APPROVED BY | BAP |
| HOR SCALE | AS SHOWN | RELEASED FOR CONSTRUCTION | |
| VERT SCALE | AS SHOWN | | |
| DATE | JUNE 27, 2023 | DATE | |

PROFESSIONAL'S SEAL
PROVINCE OF MANITOBA
A.D.G. GILARSKI
Member
32144
2023-08-02
REGISTERED PROFESSIONAL ENGINEER

CONSULTANT FILE NAME
2203665-CBR DD-ABUT01.dwg

Winnipeg

# THE CITY OF WINNIPEG
## PUBLIC WORKS DEPARTMENT
### ENGINEERING DIVISION

**CREEK BEND ROAD BRIDGE REPLACEMENT AND RELATED WORKS**

**ABUTMENT DETAILS AND SECTIONS**

CITY DRAWING NUMBER: B149-23-09

SHEET 09 OF 52

DRAWING NUMBER: 09

ISO A1 - 594mm x 841mm
X:\Proj\2022\2203665\CoW 293-2022 Creek Bend Road Bridge\09_CAD\07 Sheets\Structural\Detailed Design\2203665-CBR DD-ABUT01.dwg Last Saved: 8/2/2023 11:56 AM by AScott Plotted: 8/2/2023 3:13 PM by Alex Heppner