BILL OF REINFORCING STEEL
BARRIER (B)

MARK	TYPE	PIN DIAMETER	LENGTH (mm)	NO. BARS	MASS
B1301SS	BENT	75	595	85	50.27
B1601SS	STR	-	5880	40	365.03
B1602SS	BENT	90	1870	178	516.60
B1603SS	STR	-	600	34	31.66
B1604SS	STR	-	8045	40	499.43
B1605SS	STR	-	7885	20	244.75
B1606SS	BENT	90	1760	178	486.21
TOTAL REINFORCING STEEL MASS (kg):					2193.96

BENDING DIAGRAM

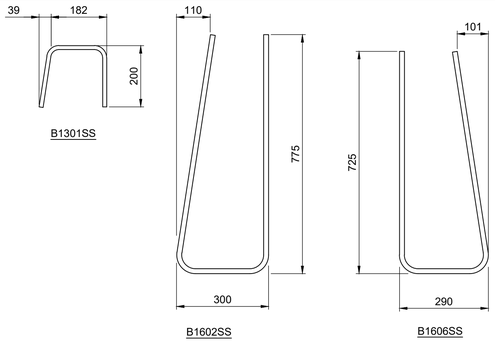

NOTES:

1. ALL DIMENSIONS GIVEN IN BENDING DIAGRAM ARE OUT-TO-OUT, EXCEPT RADII AND EXTENSIONS ON 90°, 135° & 180° HOOKS. EXTENSIONS ON 90°, 135° & 180° HOOKS ARE THE "A" OR "G" DIMENSIONS FOR THE STANDARD 90°, 135° & 180° HOOKS REFERENCED FROM THE RSIC "MANUAL OF STANDARD PRACTICE". RADII ARE INSIDE DIMENSIONS. ALL REINFORCING STEEL SHALL CONFORM TO THE LATEST EDITION OF CAN/CSA-S6 CLAUSE 8.14 "DETAILS OF REINFORCEMENT AND SPECIAL DETAILING PROVISIONS", UNLESS NOTED OTHERWISE IN THE BILL OF REINFORCING STEEL.
2. ALL REINFORCING STEEL SHALL BE DEFORMED STEEL, UNLESS NOTED OTHERWISE IN THE BILL OF REINFORCING STEEL.
3. ALL REINFORCING WITH SUFFIX "SS" SHALL BE STAINLESS STEEL CONFORMING TO THE REQUIREMENTS OF ASTM A955M, 300 SERIES, MINIMUM GRADE 420, OF ONE OF THE FOLLOWING UNS DESIGNATIONS: S31653, S31803, OR S32304.
4. ALL REINFORCING STEEL SHALL CONFORM TO THE LATEST EDITION OF CAN/CSA G30.18 "CARBON STEEL BARS FOR CONCRETE REINFORCEMENT" GRADE 400W, UNLESS NOTED OTHERWISE.
5. LIKE BARS SHALL BE BUNDLED, SECURELY TIED AND IDENTIFIED AS TO MARK AND SITE NO. BY APPROPRIATE MEANS. ALL OTHER ITEMS TO BE IDENTIFIED IN A SIMILAR FASHION.
6. UNLESS OTHERWISE NOTED DIAMETER "D" IS THE SAME ALL HOOKS AND BENDS ON A BAR. WHERE SLOPE DIFFERS FROM 45° DIMENSIONS "H" AND "K" MUST BE SHOWN.
7. BILL OF REINFORCING AND BENDING DIAGRAMS DO NOT INCLUDE CHANGES MADE DURING CONSTRUCTION. RECORD DRAWING REINFORCEMENT CHANGES ARE INCLUDED IN THE RESPECTIVE REINFORCING DETAILS.

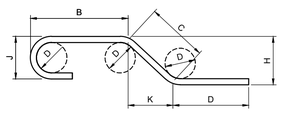

ENLARGED VIEW BAR BENDING DETAILS

BILL OF REINFORCING STEEL
CURB (C)

MARK	TYPE	PIN DIAMETER	LENGTH (mm)	NO. BARS	MASS
C1301SS	BENT	75	1325	105	138.29
C1302SS	BENT	75	1240	54	66.56
C1303SS	STR	-	5880	4	23.38
C1304SS	STR	-	8045	15	119.95
TOTAL REINFORCING STEEL MASS (kg):					348.18

BENDING DIAGRAM

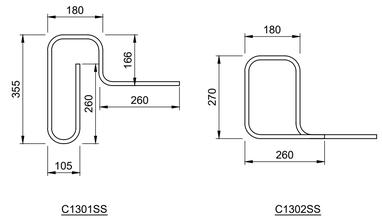

NOTES:

1. ALL DIMENSIONS GIVEN IN BENDING DIAGRAM ARE OUT-TO-OUT, EXCEPT RADII AND EXTENSIONS ON 90°, 135° & 180° HOOKS. EXTENSIONS ON 90°, 135° & 180° HOOKS ARE THE "A" OR "G" DIMENSIONS FOR THE STANDARD 90°, 135° & 180° HOOKS REFERENCED FROM THE RSIC "MANUAL OF STANDARD PRACTICE". RADII ARE INSIDE DIMENSIONS. ALL REINFORCING STEEL SHALL CONFORM TO THE LATEST EDITION OF CAN/CSA-S6 CLAUSE 8.14 "DETAILS OF REINFORCEMENT AND SPECIAL DETAILING PROVISIONS", UNLESS NOTED OTHERWISE IN THE BILL OF REINFORCING STEEL.
2. ALL REINFORCING STEEL SHALL BE DEFORMED STEEL, UNLESS NOTED OTHERWISE IN THE BILL OF REINFORCING STEEL.
3. ALL REINFORCING WITH SUFFIX "SS" SHALL BE STAINLESS STEEL CONFORMING TO THE REQUIREMENTS OF ASTM A955M, 300 SERIES, MINIMUM GRADE 420, OF ONE OF THE FOLLOWING UNS DESIGNATIONS: S31653, S31803, OR S32304.
4. ALL REINFORCING STEEL SHALL CONFORM TO THE LATEST EDITION OF CAN/CSA G30.18 "CARBON STEEL BARS FOR CONCRETE REINFORCEMENT" GRADE 400W, UNLESS NOTED OTHERWISE.
5. LIKE BARS SHALL BE BUNDLED, SECURELY TIED AND IDENTIFIED AS TO MARK AND SITE NO. BY APPROPRIATE MEANS. ALL OTHER ITEMS TO BE IDENTIFIED IN A SIMILAR FASHION.
6. UNLESS OTHERWISE NOTED DIAMETER "D" IS THE SAME ALL HOOKS AND BENDS ON A BAR. WHERE SLOPE DIFFERS FROM 45° DIMENSIONS "H" AND "K" MUST BE SHOWN.
7. BILL OF REINFORCING AND BENDING DIAGRAMS DO NOT INCLUDE CHANGES MADE DURING CONSTRUCTION. RECORD DRAWING REINFORCEMENT CHANGES ARE INCLUDED IN THE RESPECTIVE REINFORCING DETAILS.

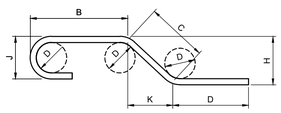

ENLARGED VIEW BAR BENDING DETAILS

ENGINEERS GEOSCIENTISTS MANITOBA
Certificate of Authorization
MORRISON HERSHFIELD
No. 1736

TENDER No. 335-2023

LOCATION APPROVED
UNDERGROUND STRUCTURES

SUPR. U/G STRUCTURES COMMITTEE — DATE

NOTE:
LOCATION OF UNDERGROUND STRUCTURES AS SHOWN ARE BASED ON THE BEST INFORMATION AVAILABLE BUT NO GUARANTEE IS GIVEN THAT ALL EXISTING UTILITIES ARE SHOWN OR THAT THE GIVEN LOCATIONS ARE EXACT. CONFIRMATION OF EXISTENCE AND EXACT LOCATION OF ALL SERVICES MUST BE OBTAINED FROM THE INDIVIDUAL UTILITIES BEFORE PROCEEDING WITH CONSTRUCTION.

BM 78-009 N.W. Cor. Paddington Rd. & Dakota St., 19 mm dia. x 6.1 m I.B. in Valve Box, 5.5 m S. of N.L. Paddington Rd. & on W.L. of Dakota St., in traffic island.
ELEV 232.749 m

No.	REVISIONS	YY/MM/DD	BY
C	ISSUED FOR TENDER	23/08/02	BAP
B	ISSUED FOR 95% REVIEW	23/06/27	BAP
A	ISSUED FOR 50% REVIEW	23/04/14	BAP

MORRISON HERSHFIELD

DESIGNED BY	ALP	CHECKED BY	AGG
DRAWN BY	AS	APPROVED BY	BAP
HOR SCALE	AS SHOWN	RELEASED FOR CONSTRUCTION	
VERT SCALE	AS SHOWN		
DATE	JUNE 27, 2023	DATE	

PROFESSIONAL'S SEAL
PROVINCE OF MANITOBA
A.D.G. GILARSKI
Member
32144
2023-08-02
REGISTERED PROFESSIONAL ENGINEER

CONSULTANT FILE NAME
2203665-CBR DD-BARRIER09.dwg

Winnipeg

THE CITY OF WINNIPEG
PUBLIC WORKS DEPARTMENT
ENGINEERING DIVISION

CREEK BEND ROAD BRIDGE REPLACEMENT AND RELATED WORKS

BARRIER AND CURB BILL OF REINFORCING

CITY DRAWING NUMBER B149-23-34
SHEET 34 OF 52
DRAWING NUMBER 34

METRIC
WHOLE NUMBERS INDICATE MILLIMETRES
DECIMALIZED NUMBERS INDICATE METRES

ISO A1 - 594mm x 841mm

X:\Proj\2022\2203665\CoTW 293-2022 Creek Bend Road Brit\09_CAD\07 Sheets\Structural\Detailed Design\2203665-CBR DD-BARRIER09.dwg Last Saved: 8/2/2023 3:09 PM by ASCott Plotted: 8/2/2023 3:32 PM by Alex Heppner