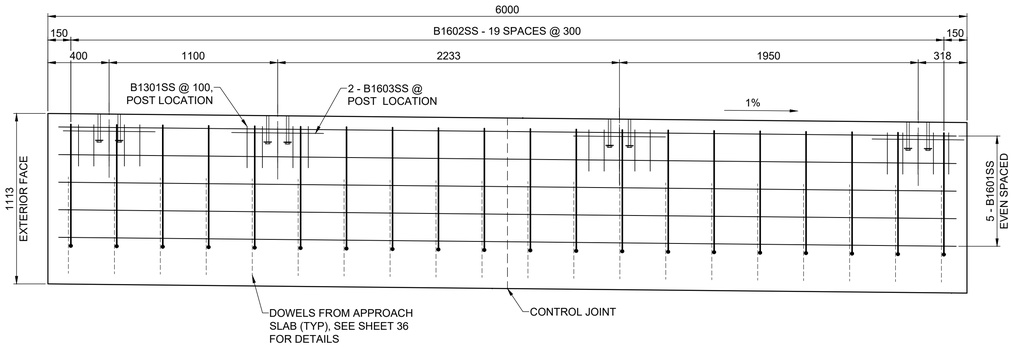

PANEL REINFORCING LAYOUT TYPE "A"

SOUTH APPROACH - EXTERIOR BARRIER

SCALE 1:20

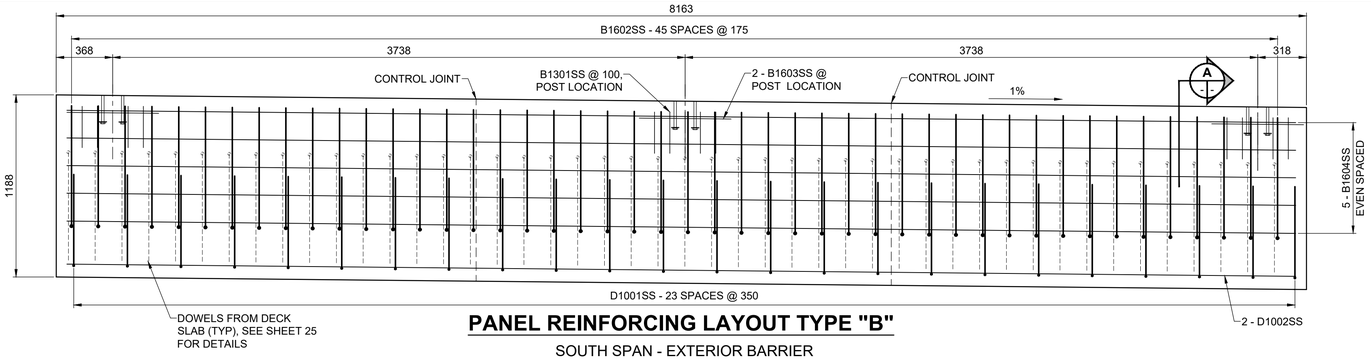

PANEL REINFORCING LAYOUT TYPE "B"

SOUTH SPAN - EXTERIOR BARRIER

SCALE 1:20

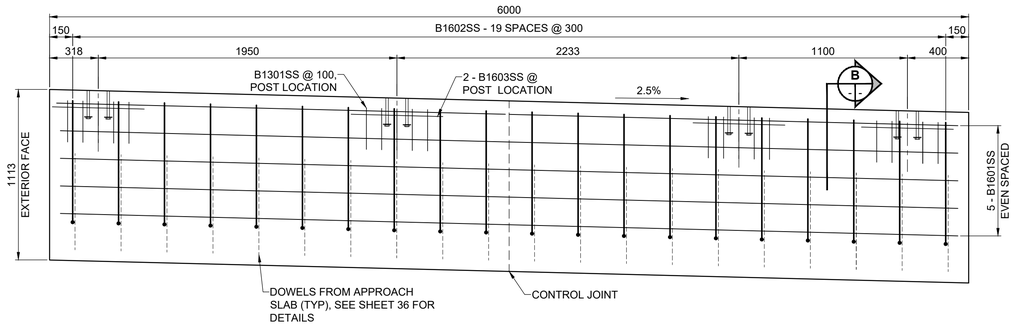

PANEL REINFORCING LAYOUT TYPE "E"

NORTH APPROACH - EXTERIOR BARRIER

SCALE 1:20

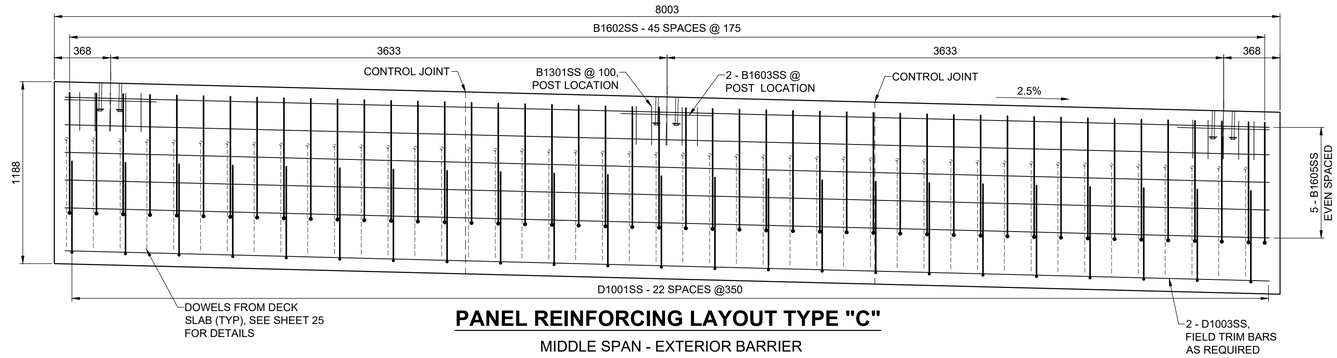

PANEL REINFORCING LAYOUT TYPE "C"

MIDDLE SPAN - EXTERIOR BARRIER

SCALE 1:20

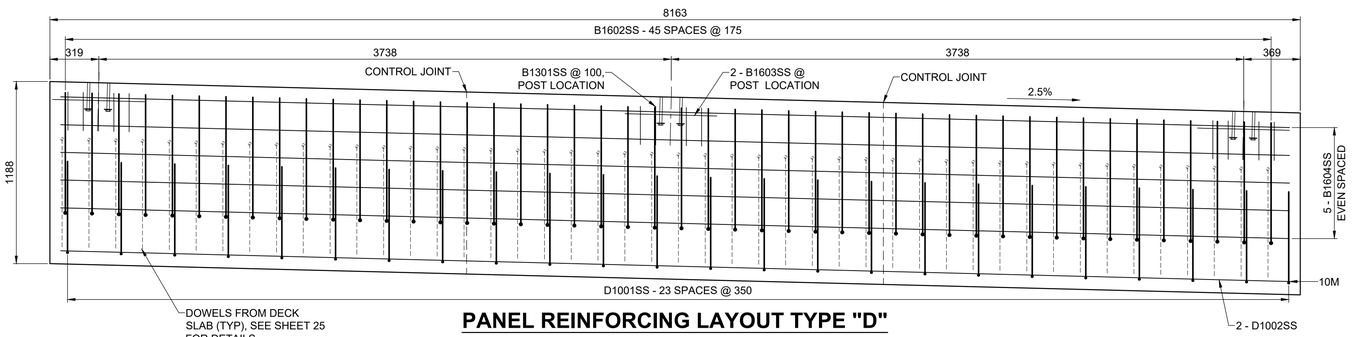

PANEL REINFORCING LAYOUT TYPE "D"

NORTH SPAN - EXTERIOR BARRIER

SCALE 1:20

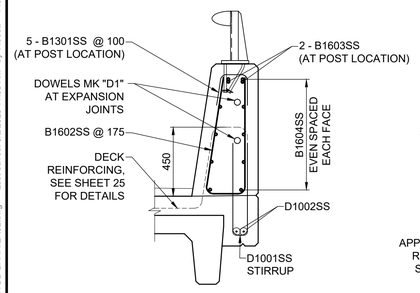

A SECTION

SCALE: 1:20

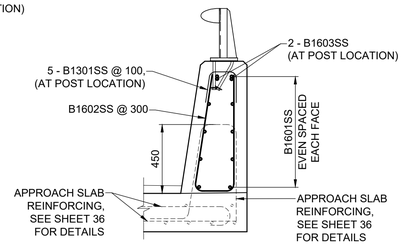

B SECTION

SCALE: 1:20

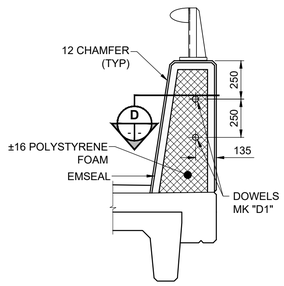

EXPANSION JOINT DETAIL

SECTION VIEW

SCALE 1:20

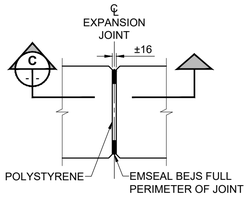

EXPANSION JOINT SEAL DETAIL

TOP VIEW

SCALE 1:10

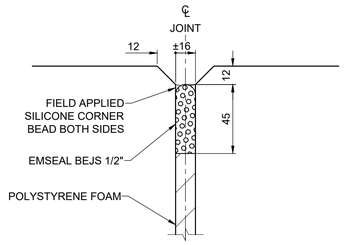

C SECTION

SCALE: 1:2

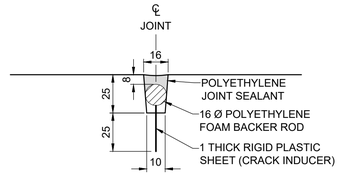

CONTROL JOINT DETAIL

SCALE 1:2

NOTES:

1. LOCALLY SHIFT VERTICAL BARRIER BARS AS REQUIRED TO PROVIDE 50mm OF CLEARANCE TO CONTROL JOINTS.
2. SEE SHEET 2 FOR STEEL DOWEL SCHEDULE.

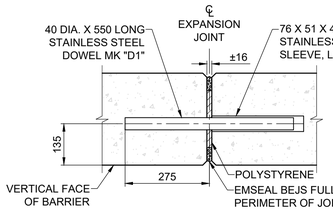

NOTE: INSTALL WITH DOWEL CENTERED AT MID-HEIGHT OF THE EXPANSION SLEEVE. DOWEL MAY BE EMBEDDED IN LOW DENSITY POLYSTYRENE TO ACHIEVE CORRECT PLACEMENT

D EXPANSION JOINT DOWEL DETAIL

TOP VIEW

SCALE 1:10

METRIC

WHOLE NUMBERS INDICATE MILLIMETRES

DECIMALIZED NUMBERS INDICATE METRES

LOCATION APPROVED

UNDERGROUND STRUCTURES

SUPR. U/G STRUCTURES COMMITTEE — DATE

NOTE:

LOCATION OF UNDERGROUND STRUCTURES AS SHOWN ARE BASED ON THE BEST INFORMATION AVAILABLE BUT NO GUARANTEE IS GIVEN THAT ALL EXISTING UTILITIES ARE SHOWN OR THAT THE GIVEN LOCATIONS ARE EXACT. CONFIRMATION OF EXISTENCE AND EXACT LOCATION OF ALL SERVICES MUST BE OBTAINED FROM THE INDIVIDUAL UTILITIES BEFORE PROCEEDING WITH CONSTRUCTION.

BM 78-009 — N.W. Cor. Paddington Rd. & Dakota St., 19 mm dia. x 6.1 m I.B. in Valve Box, 5.5 m S. of N.L. Paddington Rd. & on W.L. of Dakota St., in traffic island

ELEV 232.749 m

No.	REVISIONS	YY/MM/DD	BY
C	ISSUED FOR TENDER	23/08/02	BAP
B	ISSUED FOR 95% REVIEW	23/06/27	BAP
A	ISSUED FOR 50% REVIEW	23/04/14	BAP

MORRISON HERSHFIELD

DESIGNED BY	ALP	CHECKED BY	AGG
DRAWN BY	AS	APPROVED BY	BAP
HOR SCALE	AS SHOWN	RELEASED FOR CONSTRUCTION	
VERT SCALE	AS SHOWN		
DATE	JUNE 27, 2023	DATE	

PROFESSIONAL'S SEAL

PROVINCE OF MANITOBA — A.D.G. GILARSKI — Member — 32144 — 2023-08-02 — REGISTERED PROFESSIONAL ENGINEER

CONSULTANT FILE NAME

2203665-CBR DD-BARRIER02.dwg

Winnipeg

THE CITY OF WINNIPEG

PUBLIC WORKS DEPARTMENT

ENGINEERING DIVISION

CREEK BEND ROAD BRIDGE REPLACEMENT AND RELATED WORKS

EXTERIOR BARRIER REINFORCING

CITY DRAWING NUMBER: B149-23-28

SHEET 28 OF 52

DRAWING NUMBER: 28

ENGINEERS GEOSCIENTISTS MANITOBA

Certificate of Authorization

MORRISON HERSHFIELD

No. 1736

TENDER No. 335-2023

ISO A1 - 594mm x 841mm

X:\Proj\2022\2203665\CoIW 293-2022 Creek Bend Road Bri\09_CAD\07 Sheets\Structural\Detailed Design\2203665-CBR DD-BARRIER02.dwg Last Saved: 8/2/2023 11:08 AM by AScott Plotted: 8/2/2023 3:23 PM by Alex Heppner