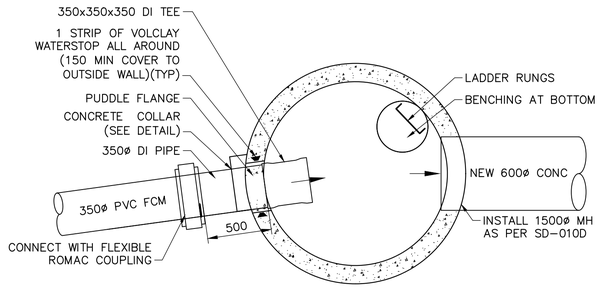

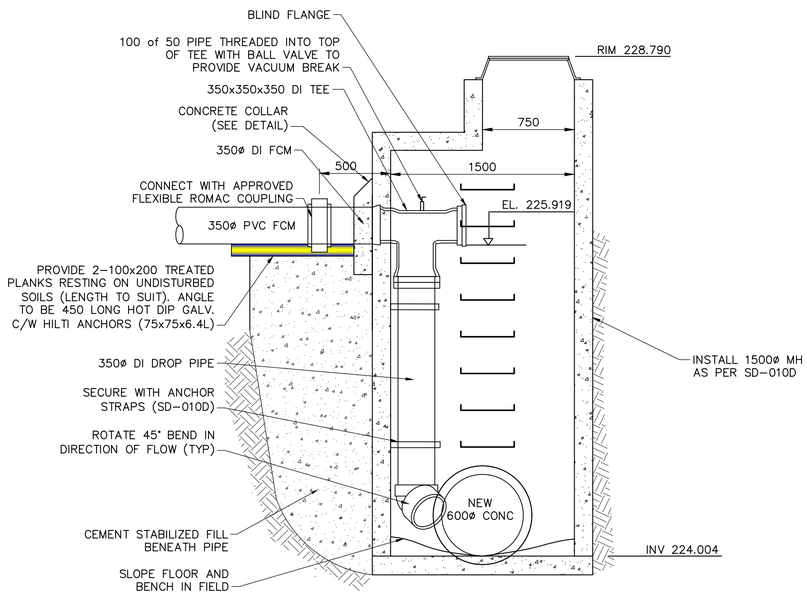

FORCEMAIN TIE-IN MANHOLE
SCALE N.T.S.

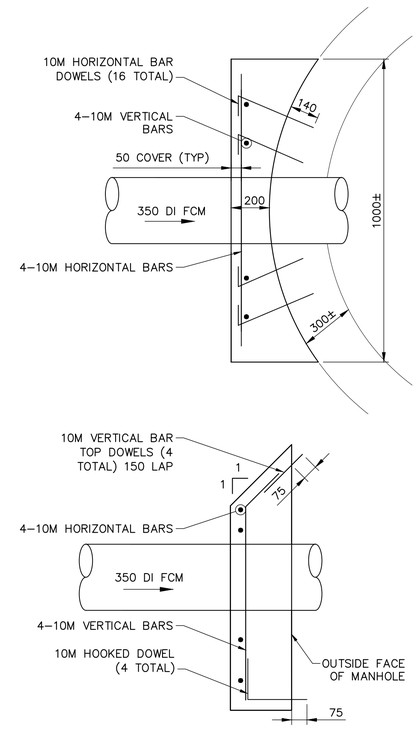

OUTER CONCRETE COLLAR DETAIL
SCALE N.T.S.

FOR INDEX PAGE
SEE DWG
1-0221S-D0007-001

ISSUED FOR TENDER
NOT TO BE USED FOR CONSTRUCTION

METRIC
WHOLE NUMBERS INDICATE MILLIMETRES
DECIMALIZED NUMBERS INDICATE METRES

LOCATION APPROVED
UNDERGROUND STRUCTURES

SUPV. U/G STRUCTURES COMMITTEE — DATE

NOTE:
LOCATION OF UNDERGROUND STRUCTURES AS SHOWN ARE BASED ON THE BEST INFORMATION AVAILABLE BUT NO GUARANTEE IS GIVEN THAT ALL EXISTING UTILITIES ARE SHOWN OR THAT THE GIVEN LOCATIONS ARE EXACT. CONFIRMATION OF EXISTENCE AND EXACT LOCATION OF ALL SERVICES MUST BE OBTAINED FROM THE INDIVIDUAL UTILITIES BEFORE PROCEEDING WITH CONSTRUCTION.

B.M.
ELEV.

NO.	REVISIONS	DATE	BY
0	ISSUED FOR TENDER	2023 03 14	RBO

KGS GROUP

DESIGNED BY	TLE	CHECKED BY	RBO
DRAWN BY	GEL	APPROVED BY	RBO
SCALE: HORIZONTAL	AS NOTED	RELEASED FOR CONSTRUCTION	
VERTICAL	NA		
DATE	2023 03 13	DATE	

PLOT DATE: 2023 03 13

ENGINEER'S SEAL
PROVINCE OF MANITOBA
2023-03-13
R. B.
OFFMAN
Member
24701
REGISTERED PROFESSIONAL ENGINEER

CONSULTANT DRAWING NUMBER
22-0107-021_C208

BID OPPORTUNITY: XXX-2022B

FILE PATH: \\k-file-4\p-data\Projects\2022\22-0107-021\Dwg\Mun\

Winnipeg
THE CITY OF WINNIPEG
WATER AND WASTE DEPARTMENT
ENGINEERING DIVISION

NEWTON FORCE MAIN
RIVER CROSSING REPLACEMENT

FORCEMAIN TIE-IN MANHOLE DETAILS

SHEET 9 OF 13

CITY DRAWING NUMBER
1-0221S-C0006-001