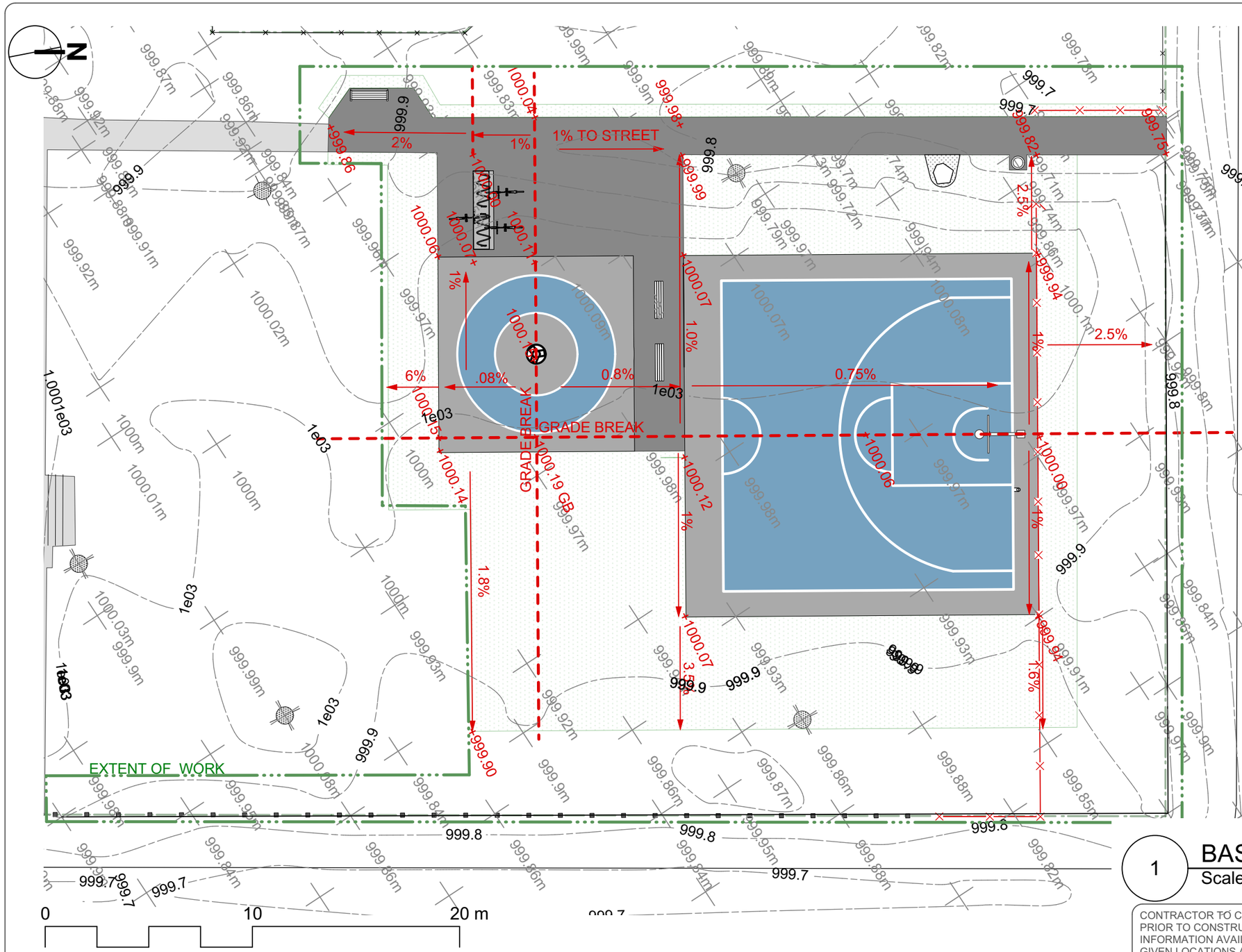

GRADING NOTES

1. ALL WORK TO CONFORM TO CURRENT CITY OF WINNIPEG STANDARD CONSTRUCTION SPECIFICATIONS AND DETAILS UNLESS OTHERWISE NOTED.
2. DIMENSIONS ARE IN **METERS** UNLESS OTHERWISE NOTED.
3. DO NOT SCALE DRAWING.
4. PROTECT EXISTING TREES TO REMAIN, TYP.
5. PAVEMENT SLOPE: DIRECTIONAL SLOPE 5% MAX., CROSS SLOPE 2% MAX., UNLESS OTHERWISE NOTED. REFER TO GRADING PLAN
6. UNLESS OTHERWISE NOTED, GRADES FOR PATHWAY AND SOD ARE TO MATCH SURROUNDING EXISTING GRADES

Proposed Slope 1.6%

Proposed Elevation +1000.00

Existing Elevation 1000.02m

Benchmark elevations are top nut of hydrant at the southwest corner of the Park (Alexander Ave. and Fountain St.) (1000.51) and the top nut of hydrant at the northeast corner of the intersection of Logan Ave and Lizzie St.) (1000.61).

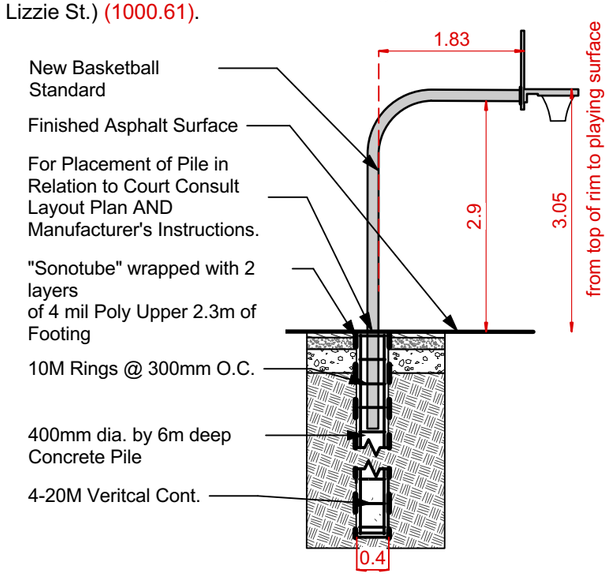

1 BASKETBALL STANDARD AND PILE DETAIL
Scale: 1:75

CONTRACTOR TO CONFIRM ALL DIMENSIONS AND REPORT ANY DISCREPANCIES TO CONTRACT ADMINISTRATOR PRIOR TO CONSTRUCTION. LOCATION OF UNDERGROUND STRUCTURES AS SHOWN ARE BASED ON THE BEST INFORMATION AVAILABLE BUT NO GUARANTEE IS GIVEN THAT ALL EXISTING UTILITIES ARE SHOWN OR THAT THE GIVEN LOCATIONS ARE EXACT. CONFIRMATION OF EXISTENCE AND EXACT LOCATION OF ALL SERVICES MUST BE OBTAINED FROM THE INDIVIDUAL UTILITIES BEFORE PROCEEDING WITH CONSTRUCTION.

Winnipeg

THE CITY OF WINNIPEG
Planning, Property and Development Department
Planning and Land Use Division
Unit 15 - 30 Fort Street, Winnipeg, MB, (R3C 4X5)

DESIGNED BY	IM/IL	CHECKED BY	
DRAWN BY	IM/IL	APPROVED BY	MANAGER, PARK AND OPEN SPACES — DATE
HORIZ. SCALE / VERT. SCALE	1:200		
DATE	June 2022		MANAGER, PLANNING AND LAND USE DIVISION — DATE

DRAWING TITLE
GIIZHIGOOWEYAABIKWE PARK
Sport Court Redevelopment
GRADING PLAN

SITE ADDRESS 242 Lizzie Street

DRAWING NO.
L-2-E3

BID OPPORTUNITY NO.
512-2022