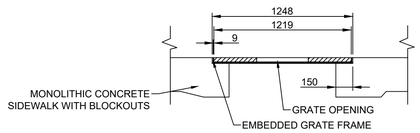

TREE GRATE FRAME - SECTION A
N.T.S.

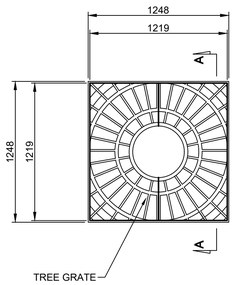

TREE GRATE AND FRAME TOP VIEW
N.T.S.

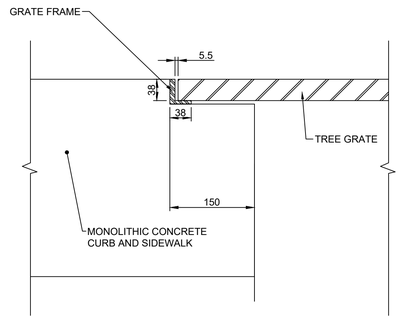

TREE GRATE WITH FRAME DETAIL
N.T.S.

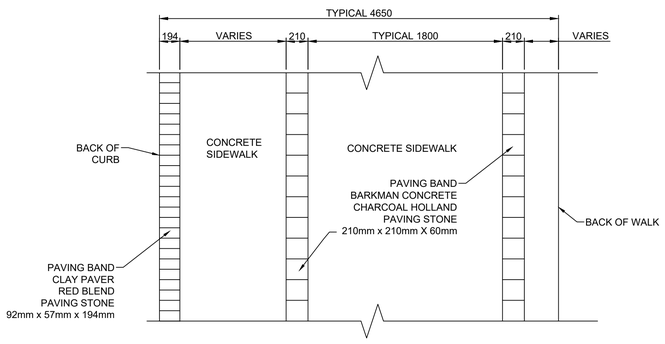

TYPICAL PAVING BAND PATTERN - PLAN VIEW - NTS

CONSTRUCTION NOTES

1. INSTALL DETECTABLE WARNING SURFACE TILE AT CURB RAMP AS PER SD-228AA (TYP.)
2. REMOVE EXISTING CONCRETE SIDEWALK AND CURB AND CONSTRUCT NEW MONOLITHIC CURB AND SIDEWALK WITH BLOCKOUTS (SEE DETAIL)
3. REMOVE EXISTING INTERLOCKING PAVING STONE SIDEWALK AND CURB AND CONSTRUCT NEW MONOLITHIC CURB AND SIDEWALK WITH BLOCKOUTS (SEE DETAIL)
4. REMOVE AND REPLACE CURB INLET BOX AND COVER, CONNECT TO EXISTING LEAD AS PER CW 2130
5. REGRADE EXISTING PAVING STONES
6. SALVAGE AND REINSTALL BICYCLE HOOP - SEE E13
7. ADJUST MANHOLE, INSTALL NEW FRAME AND SOLID COVER (AP-006, AP-007) AS DIRECTED BY CONTRACT ADMINISTRATOR
8. CONSTRUCT SILVA CELL WITH A SUMP PIT, TREE WELL CURBING, ADA COMPLIANT - 8709-A 48"x48" GRATE AND FRAME, AND 12.75m³ OF PLANTING MEDIUM ; NEW TREE TO BE SUPPLIED AND PLANTED BY OTHERS
9. CONSTRUCT SILVA CELL WITH DRAINAGE CONNECTED TO EXISTING CB, TREE WELL CURBING, ADA COMPLIANT - 8709-A 48"x48" GRATE AND FRAME, AND 12.75m³ OF PLANTING MEDIUM; NEW TREE TO BE SUPPLIED AND PLANTED BY OTHERS
10. TREE REMOVAL AS PER CW 3010-R4
11. REMOVE TREE WELL CURBING AND SOIL AND CONSTRUCT NEW MONOLITHIC CURB AND SIDEWALK (SD-228B)
12. SALVAGE AND REINSTALL BENCHES - SEE E19
13. REMOVE EXISTING MONOLITHIC CURB AND SIDEWALK AND CONSTRUCT NEW MONOLITHIC CONCRETE CURB AND SIDEWALK (SD-228B)

GENERAL NOTES

A. PAVEMENT DIMENSIONS ARE TO BACK OF CURB
B. ALL CURB RADII UNDER 15.0m SHALL BE MODIFIED
C. CONTRACTOR TO CONFIRM THE LOCATION OF ALL UTILITIES/SERVICES IN THE FIELD PRIOR TO CONSTRUCTION
D. USE EXTREME CAUTION WHEN WORKING ABOVE UTILITY VAULTS
E. CONTRACTOR TO TAKE PRECAUTIONARY STEPS TO PROTECT EXISTING TREES WITHIN THE CONSTRUCTION LIMITS AS PER CW 1140
F. CURB REPLACEMENT AS DIRECTED BY CONTRACT ADMINISTRATOR
G. GARBAGE/RECYCLING BINS TO BE REMOVED AND REPLACED BY OTHERS
H. PAVING STONE INSTALLATION AS DIRECTED BY CONTRACT ADMINISTRATOR
I. NEW TREES SUPPLIED AND PLANTED BY OTHERS, MIN. 1500 FROM BACK OF CURB
J. ADJUST ALL CURB STOPS AND WATER VALVES TO GRADE

PRELIMINARY
NOT TO BE USED FOR CONSTRUCTION

METRIC
WHOLE NUMBERS INDICATE MILLIMETERS
DECIMALIZED NUMBERS INDICATE METERS

TENDER NO. 205-2022

EXISTING	LEGEND - PLAN	PROPOSED	EXISTING	LEGEND - PLAN	PROPOSED	EXISTING	LEGEND - PROFILE	PROPOSED
	HYDRANT			LDS/WWS			UTILITY BOX	
	VALVE			WATERMAIN			UTILITY MAN HOLE	
	CURB STOP			GAS			BIKE STAND	
	MANHOLE			TRAFFIC SIGNALS			STEEL FENCE	
	CATCH BASIN			HYDRO/STREET LIGHT			RAMP CURB	
	CURB INLET			MTS/SHAW/ROGERS/TELUS			CONCRETE	
	HYDRO POLE			CURB RENEWAL			CONCRETE SIDEWALK	
	LIGHT STANDARD			PROPERTY LINE			INTERLOCKING STONE	
	TRAFFIC SIGNAL POLE		231.000	ELEVATIONS	31.000		PAVING STONE BAND	
	SURVEY BAR			TREE				
	GEODETIC BENCH MARK			SILVA CELL				

LOCATION APPROVED
UNDERGROUND STRUCTURES

SUPR. U/G STRUCTURES COMMITTEE — DATE

NOTE:
LOCATION OF UNDERGROUND STRUCTURES AS SHOWN ARE BASED ON THE BEST INFORMATION AVAILABLE. BUT NO GUARANTEE IS GIVEN THAT ALL EXISTING UTILITIES ARE SHOWN OR THAT THE GIVEN LOCATIONS ARE EXACT. CONFIRMATION OF EXISTENCE AND EXACT LOCATION OF ALL SERVICES MUST BE OBTAINED FROM THE INDIVIDUAL UTILITIES BEFORE PROCEEDING WITH CONSTRUCTION.

G.B.M. N/A
ELEV.

NO.	REVISIONS	DATE	BY
2.	SUBMITTED FOR TENDER	22/05/18	S.D.
1.	SUBMIT FOR PLAN APPROVAL	22/05/05	S.D.

ENGINEERING DIVISION
TECHNOLOGY SERVICES BRANCH
106 - 1155 PACIFIC AVE

DESIGNED BY S.D. — CHECKED BY R.W./E.H.
DRAWN BY S.D. — APPROVED BY
HOR. SCALE: 1 : 250
VERTICAL:
DATE 2022/05/18

ENGINEER'S SEAL
PROVINCE OF MANITOBA
M. E. BARNETT
REGISTERED PROFESSIONAL ENGINEER
31162
2022-05-18

Winnipeg

THE CITY OF WINNIPEG
PUBLIC WORKS DEPARTMENT

PROVENCHER BOULEVARD
FROM **TACHE AVENUE** TO **RUE AULNEAU**
2022 REGIONAL SIDEWALK RENEWAL
MISCELLANEOUS DETAILS

CITY DRAWING NUMBER SE-22-71
SHEET 4 OF 10
4