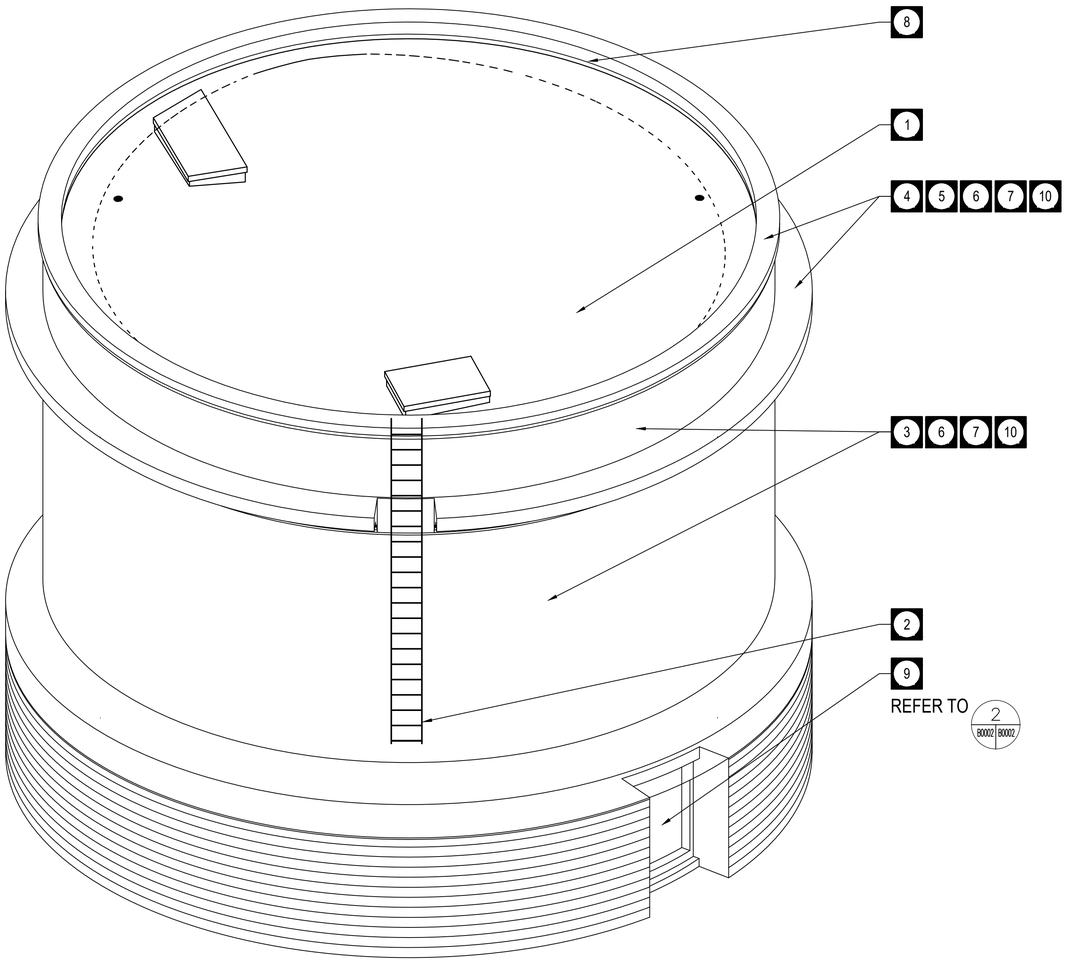

1 B0002 SURGE TOWER 3D
NOT TO SCALE

NOTE: 1

NOTE: 4, 5

NOTE: 1, 4, 8

NOTE: 4, 5, 8

NOTE: 3

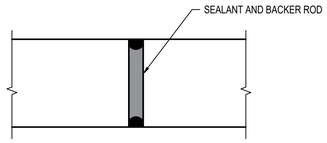

3 B0002 B0002 PARAPET COPING STONE JOINT REPAIR
NOT TO SCALE

DOOR 9

TACHE SURGE TOWER REPAIR LEGEND

	KEYNOTE REMEDIATION ACTION
1	DEMOLISH AND REMOVE EXISTING ROOFING SYSTEM. REFER TO DETAILED DRAWINGS AND STRUCTURAL DRAWINGS.
2	EXISTING ROOF ACCESS LADDER TO REMAIN. SUPPLY AND INSTALL SIGN "DO NOT USE".
3	RE-POINT ALL DETERIORATED MORTAR JOINTS ON EXTERIOR FACE OF TOWER.
4	RE-POINT ALL PARAPET AND COPING STONE JOINTS. REMOVE AS MUCH BLACK TAR FROM STONE SURFACES AT PARAPET AND CORNICE STONES AS POSSIBLE, VIA NON-DESTRUCTIVE OR CHEMICAL MEANS.
5	REPAIR ALL HOLES ON THE CORNICE AND PARAPET STONE.
6	REPLACE ALL BROKEN LIMESTONE OR CLAY BRICK UNITS TO MATCH EXISTING AS CLOSE AS POSSIBLE. SAMPLES TO BE SUBMITTED FOR REVIEW AND APPROVAL PRIOR TO INSTALLATION.
7	REPAIR CHIP AND CRACKS IN STONE AND BRICK UNITS WITH REPAIR PASTE TO MATCH EXISTING AS CLOSE AS POSSIBLE. SAMPLES TO BE SUBMITTED FOR REVIEW AND APPROVAL PRIOR TO INSTALLATION.
8	REPAIR BRICK VENEER AND SALVAGE BRICK VENEER WHERE POSSIBLE AT THE PARTAPET INSIDE FACE . REPLACE VENEER WHEN BRICK VENEER IS POOR. REPAIR MORTAR JOINTS BY REPOINTING.
9	INSTALL NEW FIBERGLASS DOOR AND THERMALLY BROKEN INSULATED WELDED FRAME. COLOUR TO MATCH EXISTING C/W NEW HARDWARE.
10	BRUSH WASH THE ENTIRE EXTERIOR OF THE TOWER AFTER REPAIRS HAVE BEEN COMPLETED

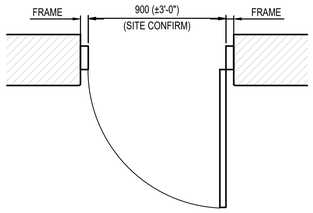

PLAN

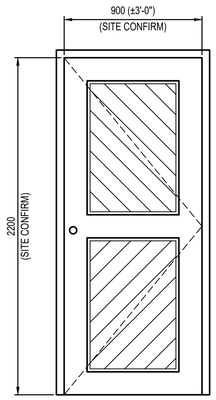

DEMOLISH AND REPLACE WITH NEW FIBERGLASS DOOR AND FRAME.

ELEVATION

2 B0002 NEW DOOR DETAILS
NOT TO SCALE

ENGINEERS GEOSCIENTISTS MANITOBA
Certificate of Authorization
AECOM Canada Ltd.
No. 4671 Date: 2022/10/11

NO.	REVISIONS	DATE	DESIGN	CHECK
0	ISSUED FOR CONSTRUCTION	2022-10-11	KS	MH

AECOM

DESIGNED BY: K. SIDDALL	CHECKED BY: M. HOQUE
DRAWN BY: G.PROFETA	APPROVED BY:
SCALE:	RELEASED FOR CONSTRUCTION BY:
DATE: 2022-10-11	DATE:
CONSULTANT NO.: 60661011	

ENGINEER'S SEAL
PROVINCE OF MANITOBA
Oct. 11,2022
JOHN D'IGNAZIO
REGISTERED ARCHITECT

Winnipeg
THE CITY OF WINNIPEG
WATER AND WASTE DEPARTMENT

TACHE BOOSTER PUMPING STATION
AND SURGE TOWER UPGRADES
ARCHITECTURAL
SURGE TOWER EXTERIOR
EXTERNAL REMEDIATION

CITY DRAWING NUMBER	SHEET	REV.	SIZE
1-0660R-B0002-001	8 of 13	0	A1

A1 SIZE - 594mm x 841mm

LAST SAVE: 2022/10/07 2:44 PM
PATH: L:\Legacy\CAM\PG1FP001\Data\Projects\60661011\1900-CAD_GIS\910-CAD\20-SHEETS\Architectural CAD June 15\2022\A0008.dwg