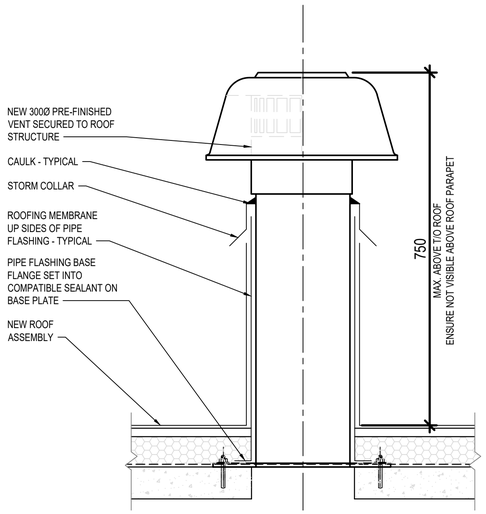

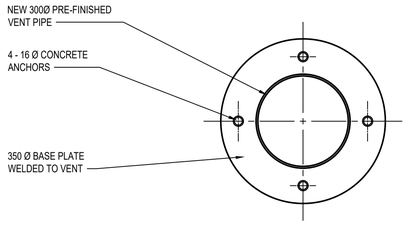

1 B0003 B0004 VENT PIPE THRU ROOF - FLASHING DETAIL

SCALE: NTS

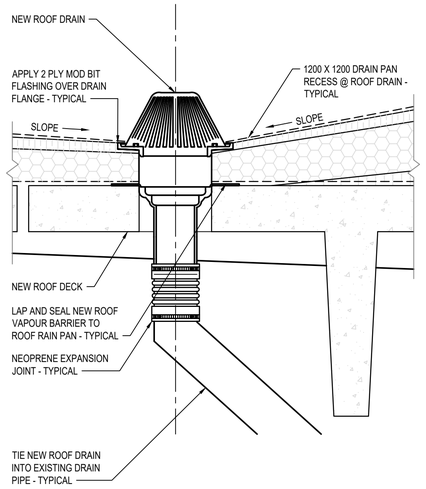

NOTE:
INCLUDING BUT NOT LIMITED TO: ROOF DRAIN, DRAIN PIPE, NEOPRENE JOINT CONNECTIONS ARE TO BE COMPATIBLE IN BOTH BOTH MATERIAL(S) AND SIZES TO THAT OF EXISTING ROOF DRAINAGE SYSTEM, UNLESS OTHERWISE NOTED. SHOP DRAWINGS AND PRODUCT DATA SHEETS ARE REQUIRED FOR REVIEW FOR ALL PROPOSED COMPONENTS OF NEW DRAINS.

2 B0004 ROOF DRAIN DETAIL

SCALE: NTS

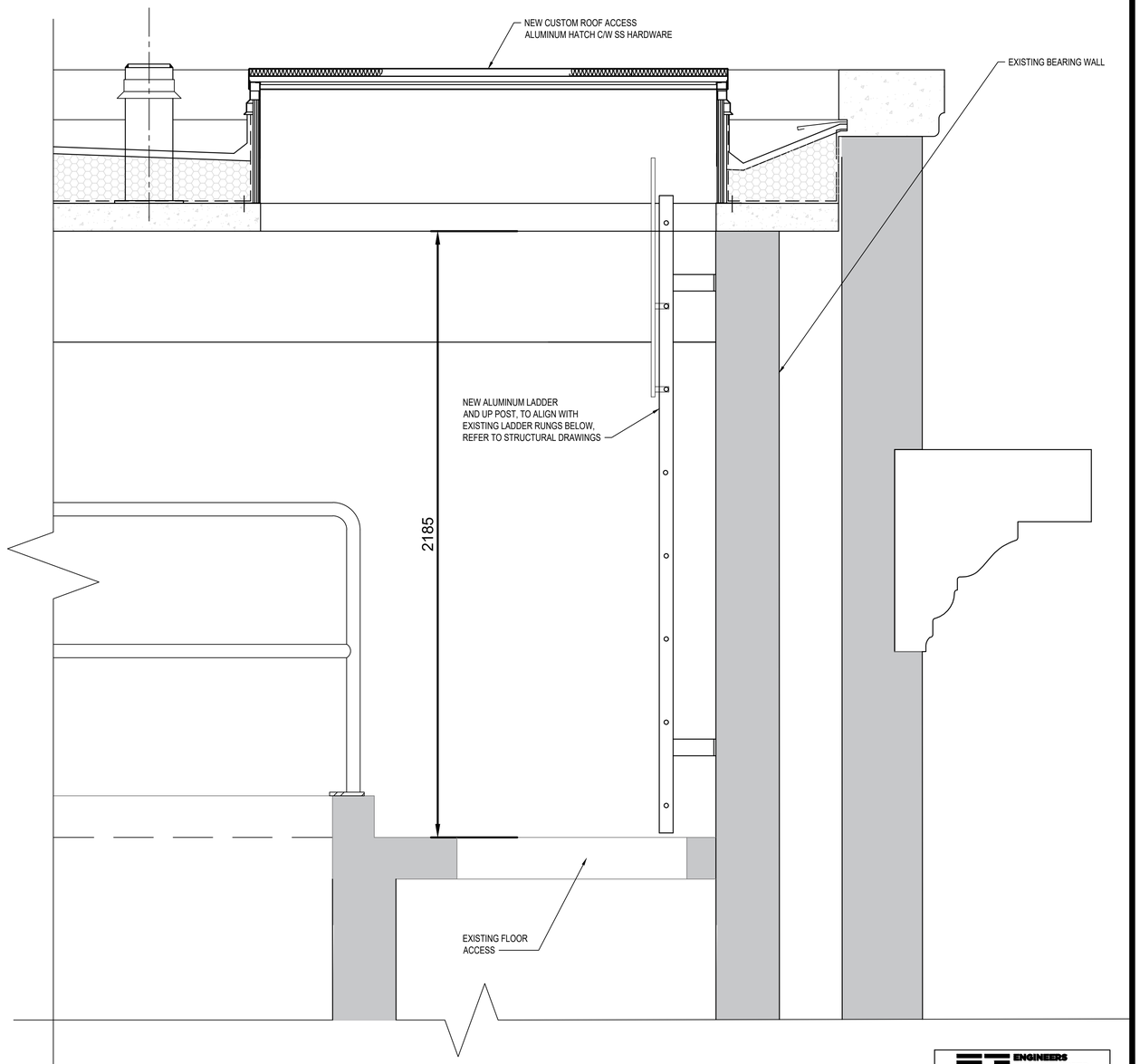

4 B0003 B0004 NEW LADDER SECTION DETAIL

SCALE: 1:10

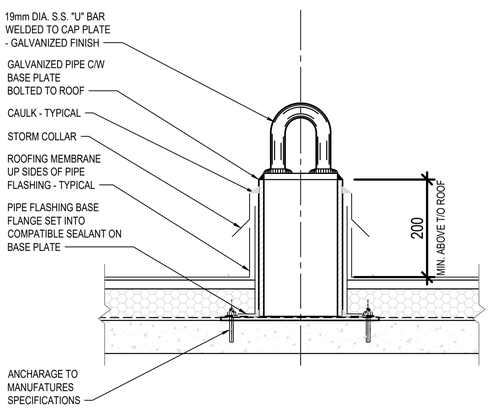

3 B0004 PERMANENT FALL ARREST ANCHOR SECTION

SCALE: 1:10

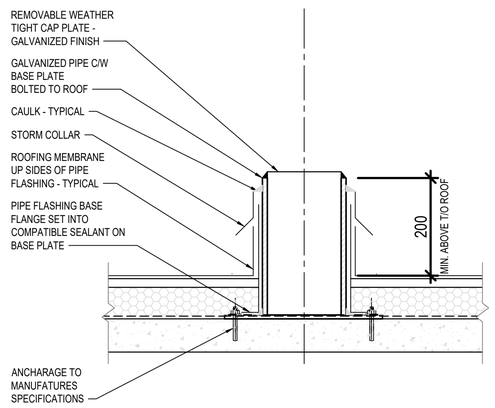

5 B0003 B0004 PERMANENT DAVIT SLEEVE SECTION

SCALE: 1:10

ENGINEERS GEOSCIENTISTS MANITOBA
Certificate of Authorization
AECOM Canada Ltd.
No. 4671 Date: 2022/10/11

NO.	REVISIONS	DATE	DESIGN	CHECK
0	ISSUED FOR CONSTRUCTION	2022-10-11	KS	MH

AECOM

DESIGNED BY: K. SIDDALL
CHECKED BY: M. HOQUE
DRAWN BY: G. PROFETA
APPROVED BY:
SCALE:
RELEASED FOR CONSTRUCTION BY:
DATE: 2022-10-11
DATE:
CONSULTANT NO.: 60661011

ENGINEER'S SEAL
PROVINCE OF MANITOBA
Oct. 11,2022
JOHN D'IGNAZIO
REGISTERED ARCHITECT

Winnipeg
THE CITY OF WINNIPEG
WATER AND WASTE DEPARTMENT

TACHE BOOSTER PUMPING STATION AND SURGE TOWER UPGRADES
ARCHITECTURAL

SECTIONS AND DETAILS

CITY DRAWING NUMBER	SHEET	REV.	SIZE
1-0660R-B0004-001	10 of 13	0	A1

A1 SIZE - 594mm x 841mm

LAST SAVE: 2022/10/07 2:53 PM
PATH: L:\Legacy\CAN\PGH\PP001\Data\Projects\60661011\900\CAD, GIS\910-CAD\20-SHEETS\Architectural\ CAD June 15 2022\A00010.dwg