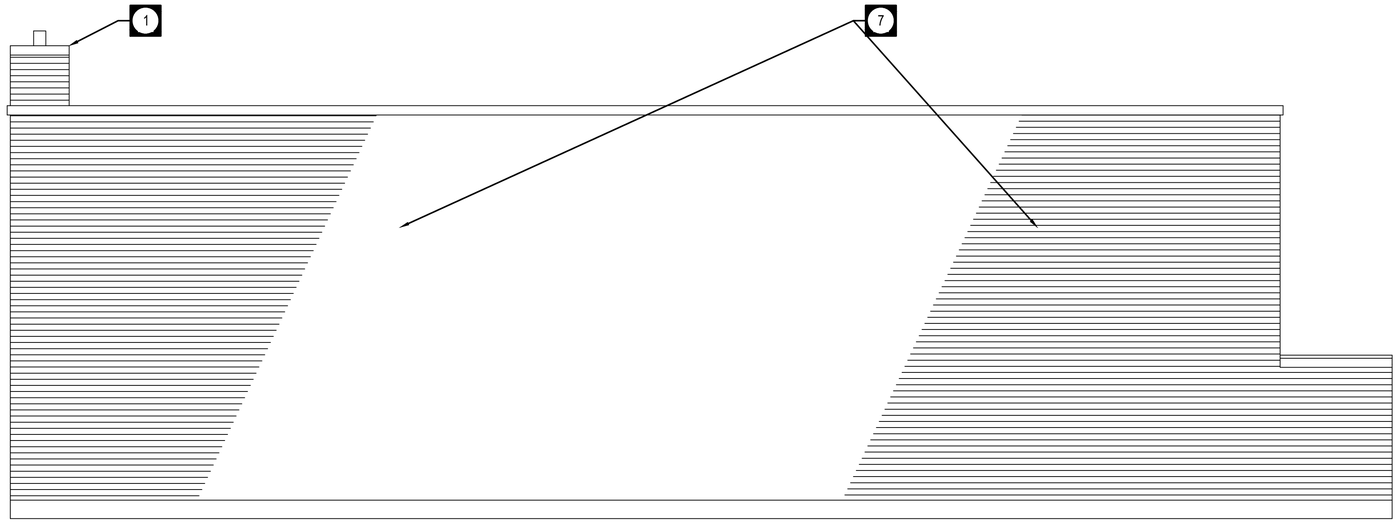


1 NORTH ELEVATION
B0006 SCALE: 1:50

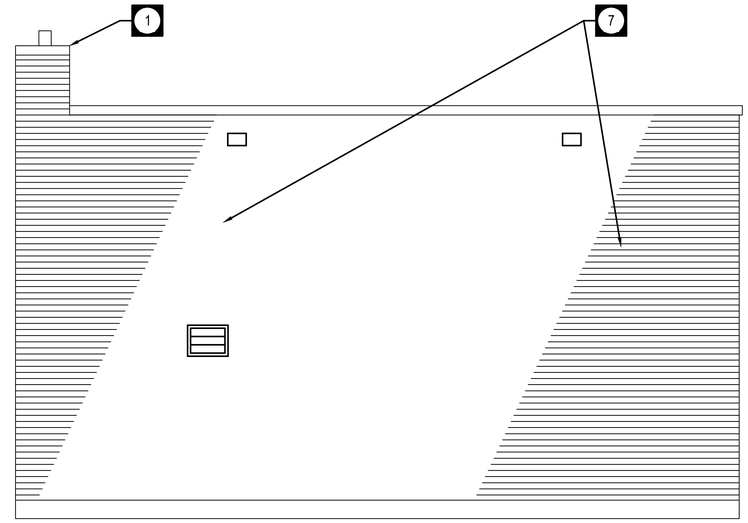


2 EAST ELEVATION
B0006 SCALE: 1:50

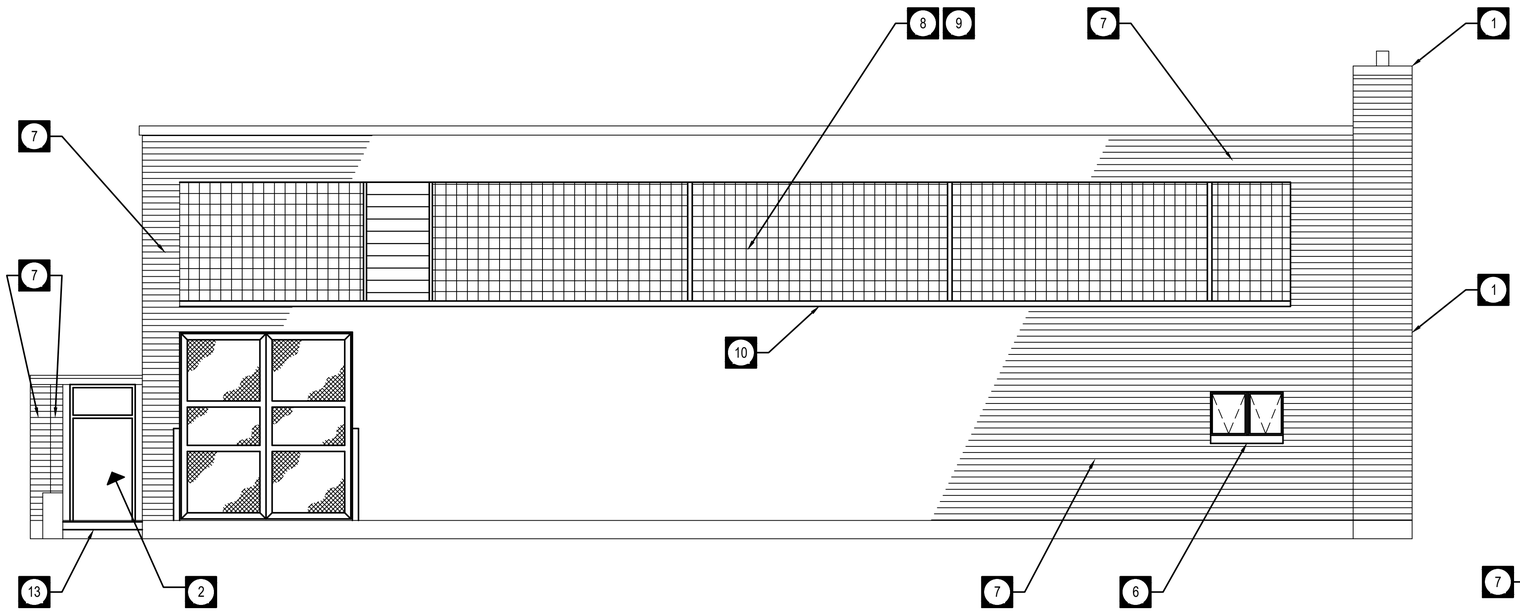


3 SOUTH ELEVATION
B0006 SCALE: 1:50

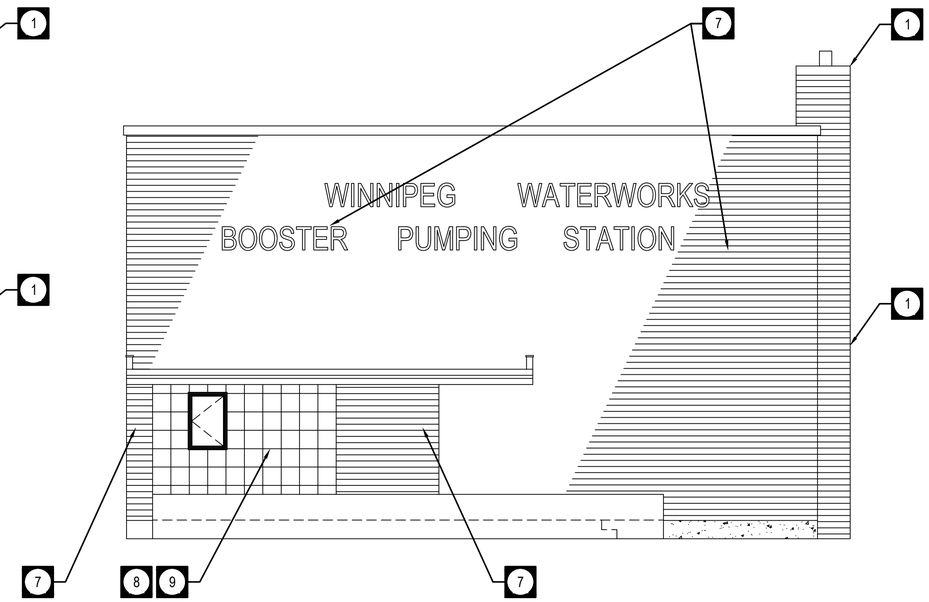


4 WEST ELEVATION
B0006 SCALE: 1:50

## TACHE BOOST PUMPING STATION REPAIR LEGEND

| | KEYNOTE REMEDIATION ACTION |
|---|---|
| 1 | REPOINT DETERIORATED MORTAR JOINTS AS REQUIRED ON CHIMNEY, AND INSTALL NEW ALUMINUM CHIMNEY CAP. REFER ALSO TO BUILDING PLANS. |
| 2 | REPLACE EXISTING DOOR WITH NEW INSULATED STEEL DOOR AND FRAME AND NEW HARDWARE. AND INSULATED GLAZED TRANSOM WINDOW ABOVE. ALL SIZES TO BE CONFIRMED ON SITE. |
| 6 | REPLACE EXISTING WOOD WINDOW ON SOUTH BUILDING ELEVATION WITH INSULATED PVC UNIT C/W INSULATED GLAZING UNIT. |
| 7 | REPOINT DETERIORATED MORTAR JOINTS ON EXTERIOR WALLS AS REQUIRED THROUGHOUT |
| 8 | REPOINT DETERIORATED MORTAR JOINTS ON GLASS BLOCKS BOTH EXTERIOR AND INTERIOR AS REQUIRED THROUGHOUT. |
| 9 | REPLACE BROKEN GLASS BLOCKS AS REQUIRED THROUGHOUT. NEW GLASS BLOCK UNITS TO MATCH AS CLOSE AS POSSIBLE EXISTING GLASS BLOCK UNITS. |
| 10 | REPAIR ALL CRACKS IN EXISTING CONCRETE WINDOW SILLS |
| 13 | REPAIR EXISTING CONCRETE STEPS. CONCRETE TO HAVE BROOM FINISH. |

0 1250 2500 mm

| NO. | REVISIONS | DATE | DESIGN | CHECK |
|---|---|---|---|---|
| 0 | ISSUED FOR CONSTRUCTION | 2022-10-11 | KS | MH |

AECOM

| | |
|---|---|
| DESIGNED BY: K. SIDDALL | CHECKED BY: M. HOQUE |
| DRAWN BY: G. PROFETA | APPROVED BY: |
| SCALE: | RELEASED FOR CONSTRUCTION BY: |
| DATE: 2022-10-11 | DATE: |
| CONSULTANT NO.: 60661011 | |

ENGINEER'S SEAL
PROVINCE OF MANITOBA
Oct. 11,2022
JOHN D'IGNAZIO
REGISTERED ARCHITECT

ENGINEERS GEOSCIENTISTS MANITOBA
Certificate of Authorization
AECOM Canada Ltd.
No. 4671 Date: 2022/10/11

Winnipeg
THE CITY OF WINNIPEG
WATER AND WASTE DEPARTMENT

TACHE BOOSTER PUMPING STATION
AND SURGE TOWER UPGRADES
ARCHITECTURAL
TACHE BOOSTER PUMPING STATION REMEDIATION
EXISTING BUILDING ELEVATIONS

| CITY DRAWING NUMBER | SHEET | REV. | SIZE |
|---|---|---|---|
| 1-0660M-B0006-001 | 5 of 13 | 0 | A1 |

LAST SAVE: 2022/10/11 8:54 AM
PATH: L:\Legacy\CAN\PCI\FP001\Data\Projects\60661011\1600-CAD_GIS\910-CAD\20-SHEETS\Architectural CAD June 15 2022\A0005.dwg