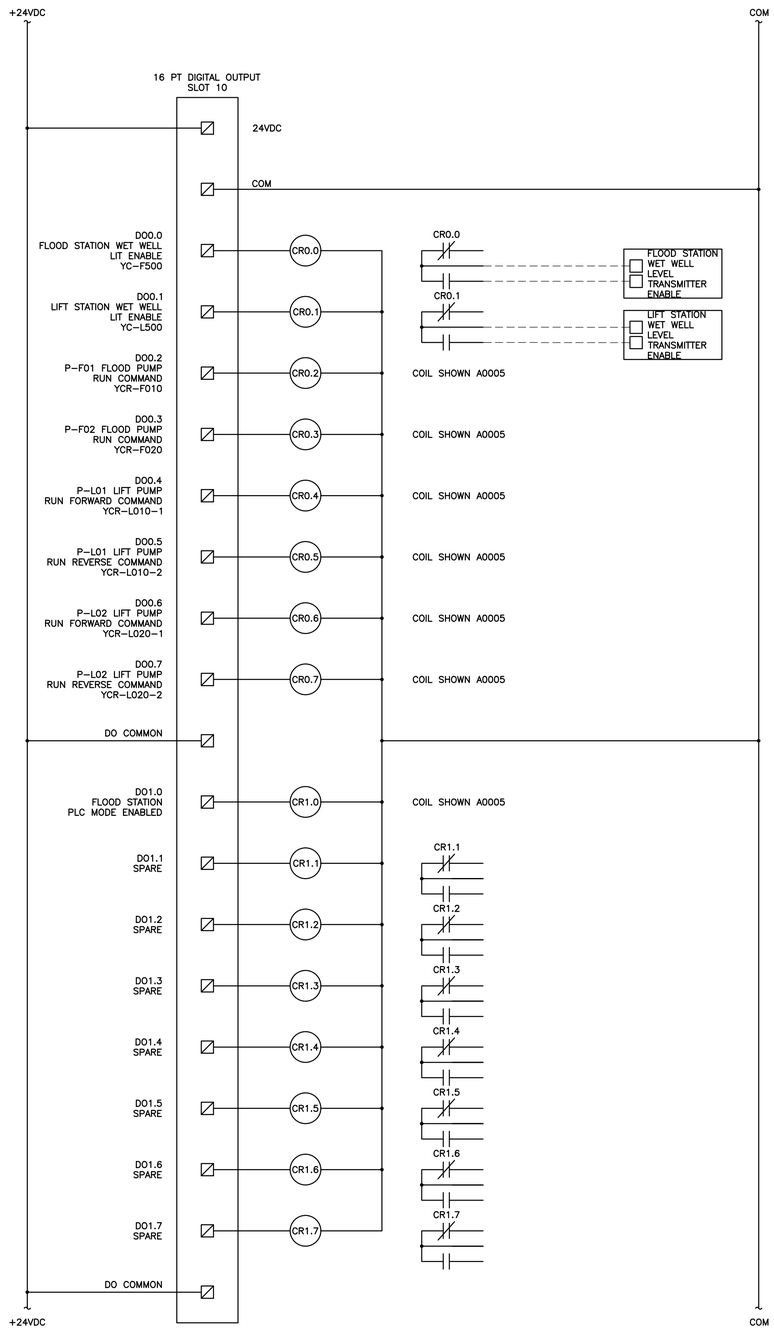

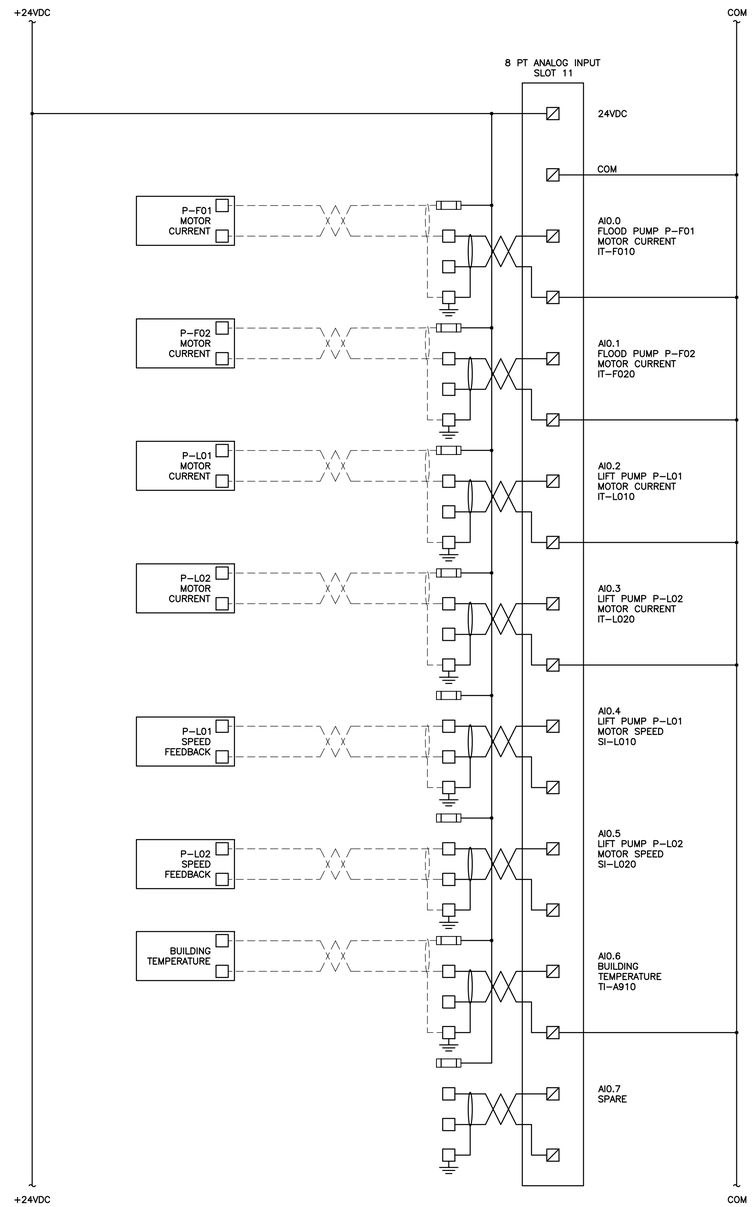

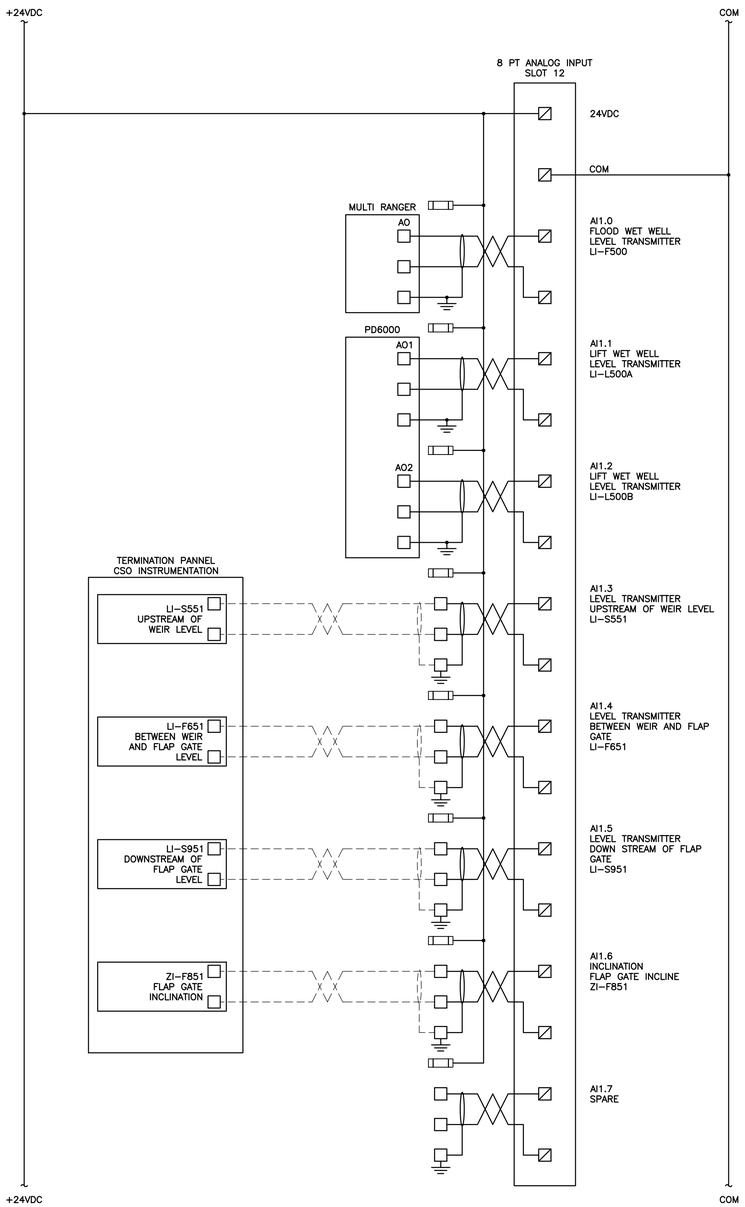

ENGINEERS GEOSCIENTISTS MANITOBA
Certificate of Authorization
Tetra Tech Canada Inc.
No. 6499

THE INFORMATION CONTAINED ON THIS DRAWING HAS BEEN PREPARED SOLELY FOR THE OWNER FOR USE ON THIS PROJECT AND IS COPYRIGHTED. ANY UNAUTHORIZED USE OF THIS INFORMATION IS A BREACH OF COPYRIGHT AND WILL BE PURSUED AS SUCH. USE OF THE INFORMATION ON THIS DRAWING IN WHOLE OR IN PART OTHER THAN FOR THE INTENDED PURPOSE IS AT THE SOLE RISK OF THE USER.

B.M.
ELEV.
F.B.

NO.	REVISIONS	DATE	BY
00	ISSUED FOR TENDER	21.08.26	DWD

TETRA TECH

DESIGNED BY	DWD	CHECKED BY	DWD
DRAWN BY	KS	APPROVED BY	CM
HOR. SCALE: / VERTICAL:	AS NOTED	RELEASED FOR CONSTRUCTION	
DATE	21.08.26	DATE	

PROVINCE OF MANITOBA
2021-10-25
D.W. DOWHAN
Member
7986
REGISTERED PROFESSIONAL ENGINEER

CONSULTANT DRAWING NO.
734-2100120600-DWG-A0008

Winnipeg
THE CITY OF WINNIPEG
WATER AND WASTE DEPARTMENT

LINDEN LIFT AND FLOOD PUMPING STATION UPGRADES

AUTOMATION
PLC PANEL CP-A81
I/O WIRING - DISCRETE OUTPUTS & ANALOG IN

CITY DRAWING NUMBER
1-0155L-A0007-001
SHEET 35 OF 50
A0008