Hughes-Owens (Manitoba) 1985 Ltd.

REF. OR DRAWING No. 1227

DETAILS

file # SP10354

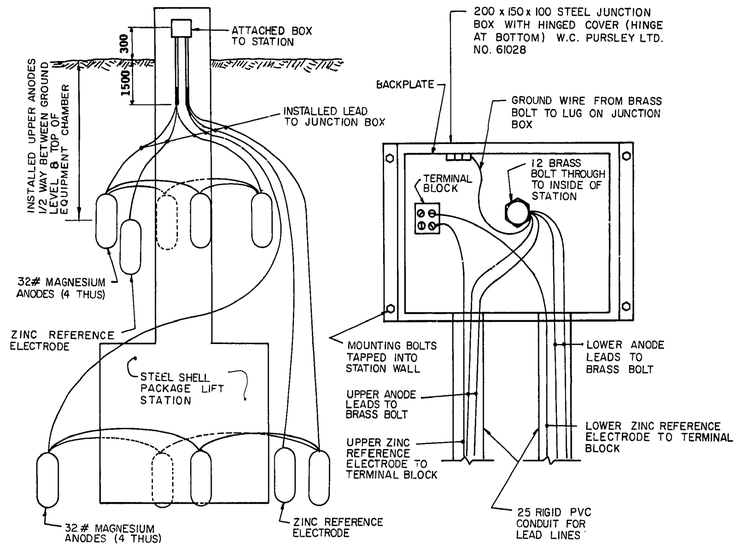

ANODE LAYOUT

JUNCTION BOX CONNECTIONS

- ALL ANODE AND REFERENCE ELECTRODE LEAD WIRES AWG #8 AND MARKED FOR UNDERGROUND USE
- ALL ANODE LEAD WIRES TAGGED OR IDENTIFIED AS TO UPPER, LOWER OR ZINC REFERENCE
- ALL ANODE AND REFERENCE ELECTRODE LEAD WIRES FULLY INSULATED
- ALL SPLICES FOR ANODE LEAD WIRES MADE WITH CADWELD SPLICE AND WRAPPED WITH INSULATION TAPE AND PVC ELECTRICAL TAPE
- USED #8 FULL CIRCLE OR EYELET STAKEON CONNECTORS FOR ANODE LEAD WIRE CONNECTION TO BRASS BOLT
- COATED ALL MOUNTING BOLTS ON INSIDE OF STATION WITH EPOXY TOUCH-UP KIT SUPPLIED WITH STATION
- LOWER ANODES INSTALLED AT THE BOTTOM LEVEL OF THE EQUIPMENT CHAMBER
- ZINC REFERENCE ELECTRODES INSTALLED WITHIN 300 OF THE ACCESS TUBE AND THE EQUIPMENT CHAMBER
- MAGNESIUM ANODES INSTALLED EQUALLY SPACED ABOUT THE CIRCUMFERENCE ONE METRE FROM THE ACCESS TUBE AND THE EQUIPMENT CHAMBER

ANODE WIRING AND LAYOUT DETAIL

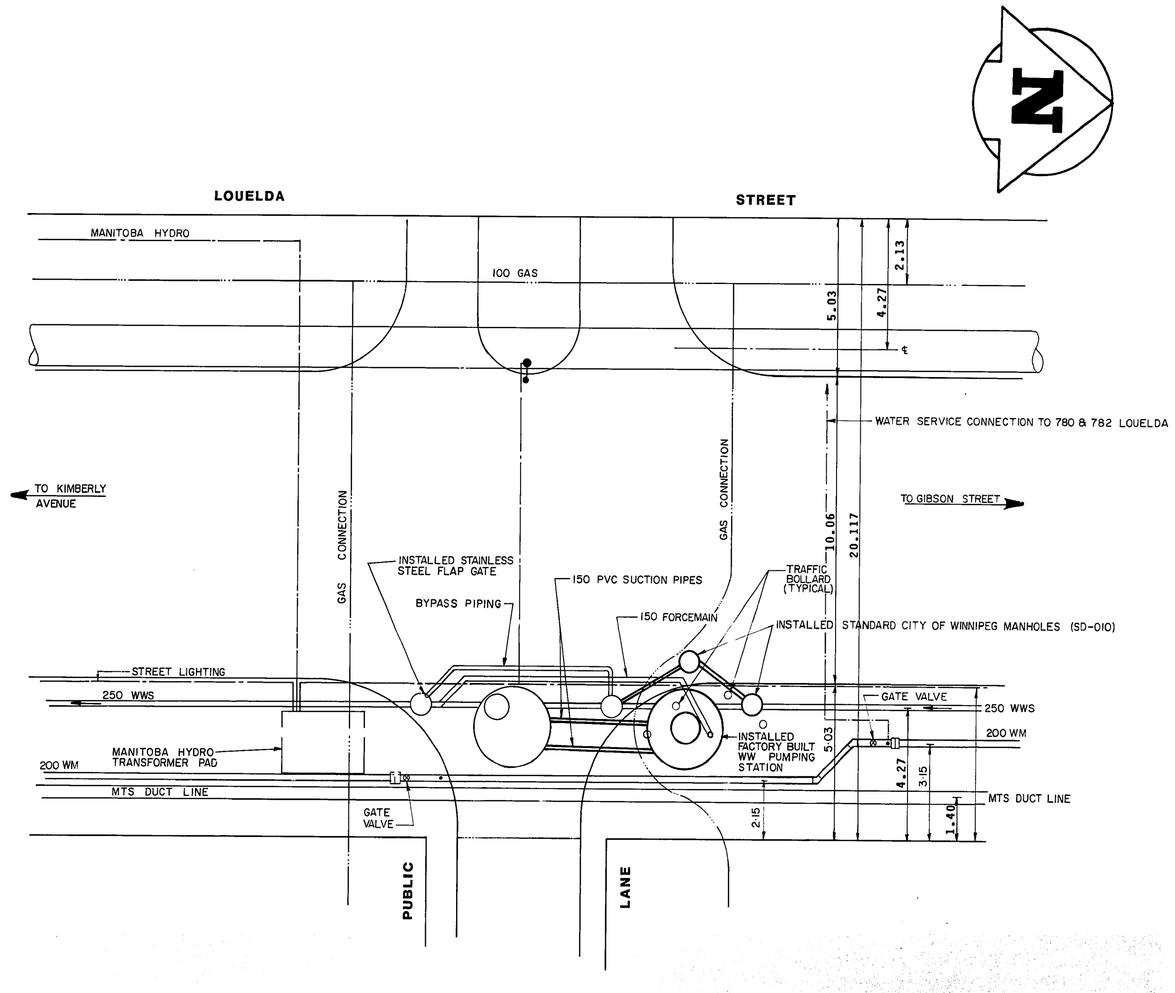

SITE PLAN
1:100

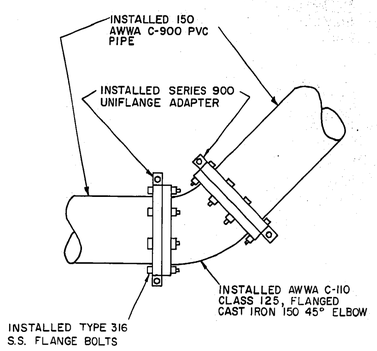

DETAIL OF CONNECTION AT FORCEMAIN BENDS
NTS

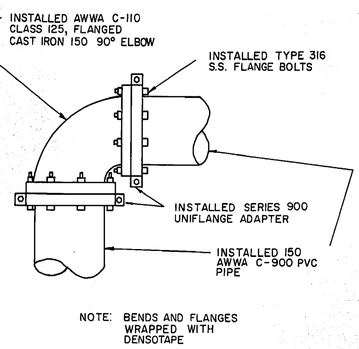

NOTE: BENDS AND FLANGES WRAPPED WITH DENSOTAPE

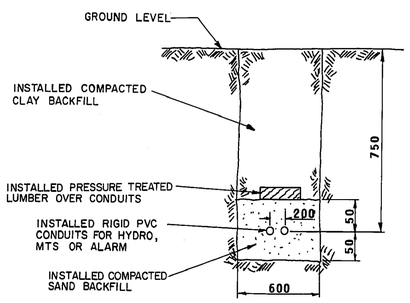

DETAIL OF SERVICE TRENCH FOR HYDRO, MTS AND ALARM CONDUITS
NTS

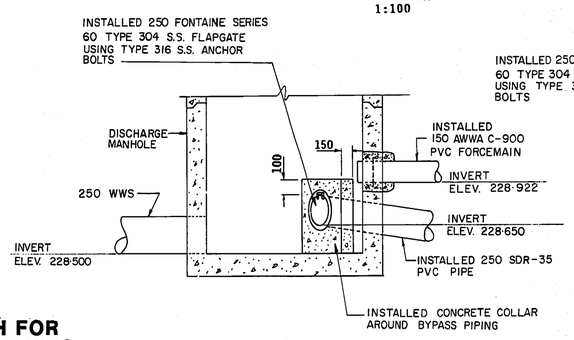

SECTION A-A

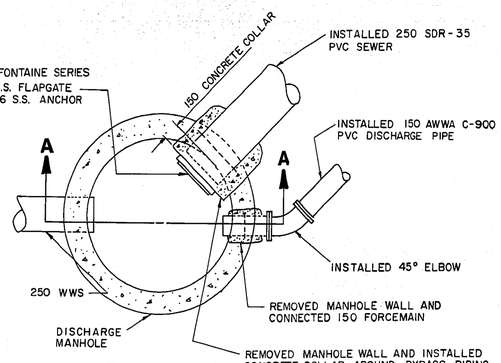

PLAN VIEW

DETAIL OF FLAP GATE INSTALLATION
N.T.S.

BM 11-006 ELEV 232.060	TBLT IN N. CONC. FOUNDATION OF BERTRUN E. GLAVIN SCHOOL		
1	REV'D TO AS CONSTRUCTED	01-1989	
NO	REVISIONS	DATE	BY

AS-CONSTRUCTED
INSPECTION/SURVEY — TECHNICAL SERVICES — DATE 89.02.15
WATERWORKS, WASTE & DISPOSAL DEPARTMENT

WORKS & OPERATIONS DIVISION
WATERWORKS, WASTE & DISPOSAL DEPARTMENT

DESIGNED BY	C.T.	CHECKED BY	R.A.S.
DRAWN BY	M.B.D.	APPROVED BY	
HOR SCALE / VERTICAL	AS NOTED	RELEASED FOR CONSTRUCTION	
DATE	JANUARY 1988	DATE	88·02·11

ENGINEER: PROVINCE OF MANITOBA R. A. SOROKOWSKI FEB. 8/88 REGISTERED PROFESSIONAL ENGINEER

CONSULTANT DRAWING NO.

THE CITY OF WINNIPEG
WORKS AND OPERATIONS DIVISION

LOUELDA FACTORY-BUILT WASTEWATER PUMPING STATION

SITE PLAN AND DETAIL SHEET

CITY DRAWING NUMBER
SHEET 1 OF 6
1227

Hughes-Owens (Manitoba) 1985 Ltd.

file # SP10354

WO 101-84

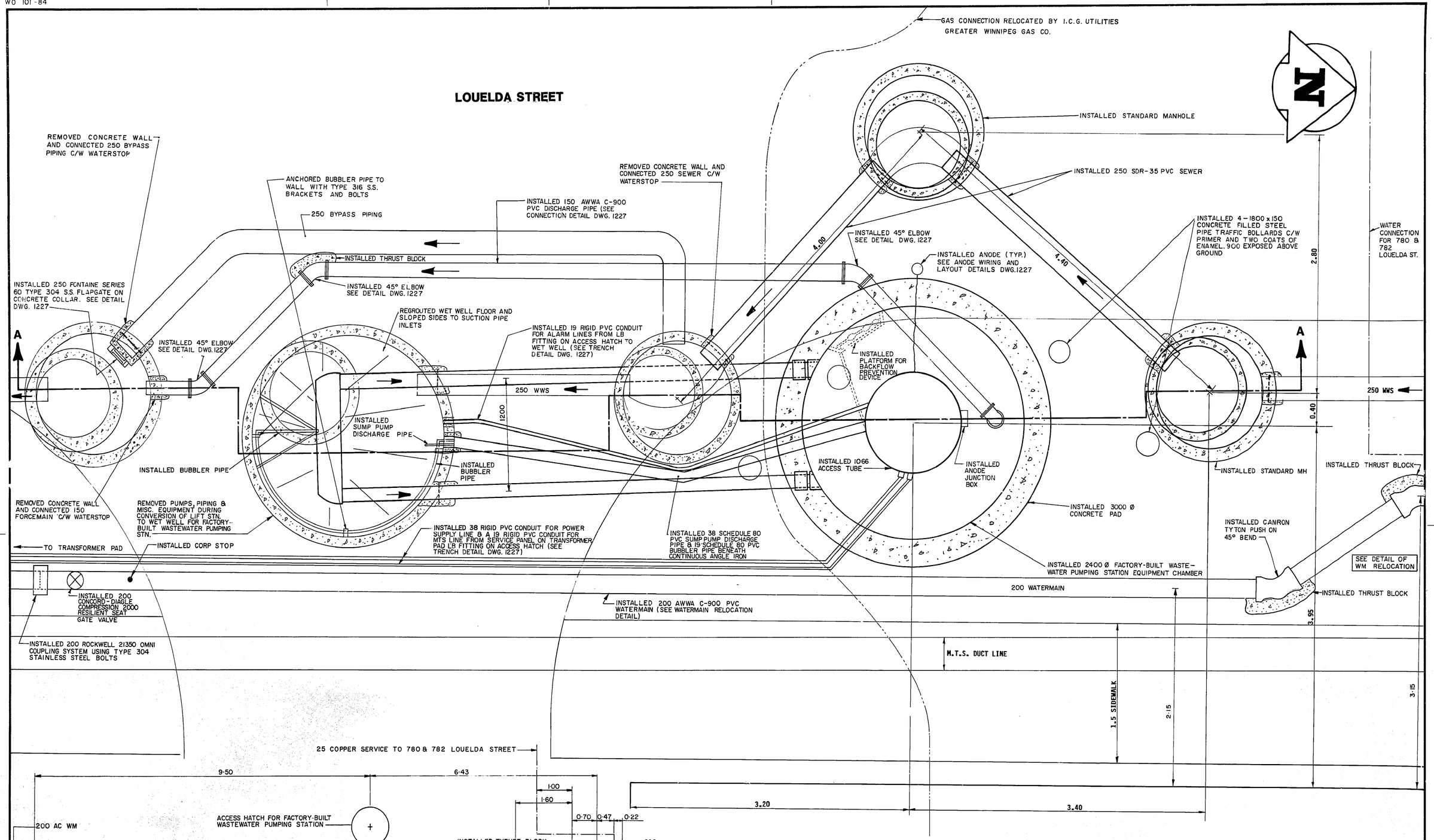

PLAN VIEW
1:20

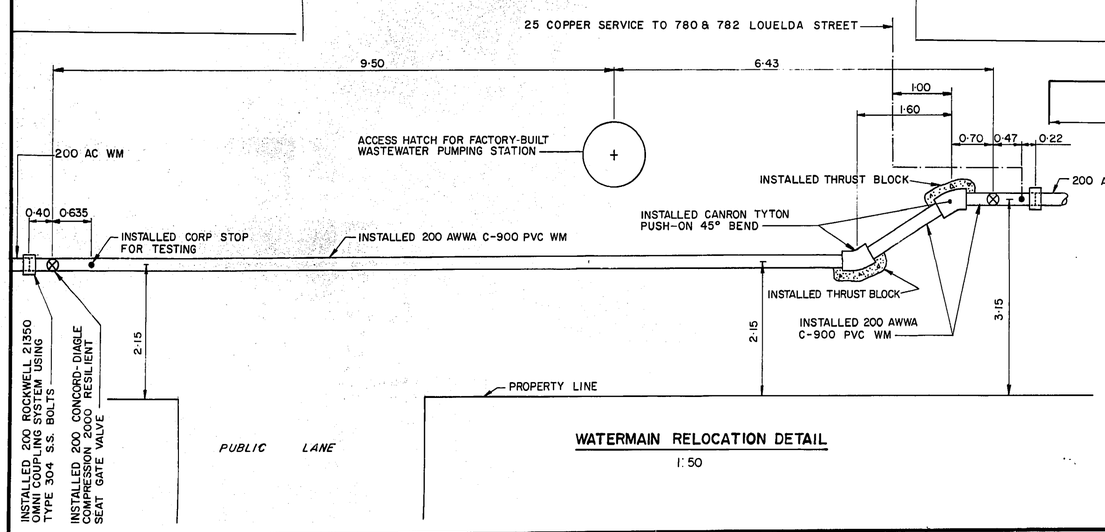

WATERMAIN RELOCATION DETAIL
1:50

AS-CONSTRUCTED
INSPECTION / SURVEY — TECHNICAL SERVICES — DATE
WATERWORKS, WASTE & DISPOSAL DEPARTMENT

B.M. 11-006 ELEV 232.060	TBLT. IN N. CONC. FOUNDATION OF BERTRUN E. GLAVIN SCHOOL		
1	REV'D TO AS CONSTRUCTED	01-1989	
NO	REVISIONS	DATE	BY

WORKS & OPERATIONS DIVISION
WATERWORKS, WASTE & DISPOSAL DEPARTMENT

DESIGNED BY	C.T.	CHECKED BY	R.A.S.
DRAWN BY	M.B.D.	APPROVED BY	
HOR SCALE / VERTICAL	AS NOTED	RELEASED FOR CONSTRUCTION	
DATE	JANUARY 1988	DATE	88-02-11

ENGINEER'S SEAL
PROVINCE OF MANITOBA — R. R. SOROKOWSKI — REGISTERED PROFESSIONAL ENGINEER — FEB. 8/88
CONSULTANT DRAWING NO.

THE CITY OF WINNIPEG
WORKS AND OPERATIONS DIVISION

LOUELDA FACTORY-BUILT WASTEWATER PUMPING STATION

PLAN VIEW

CITY DRAWING NUMBER
SHEET 2 OF 6
1228

file # SP10255

REF. or DRAWING NO. 1228
DETAILS
file # SP10255
Hughes-Owens (Manitoba) 1985 Ltd.

WO 101-84

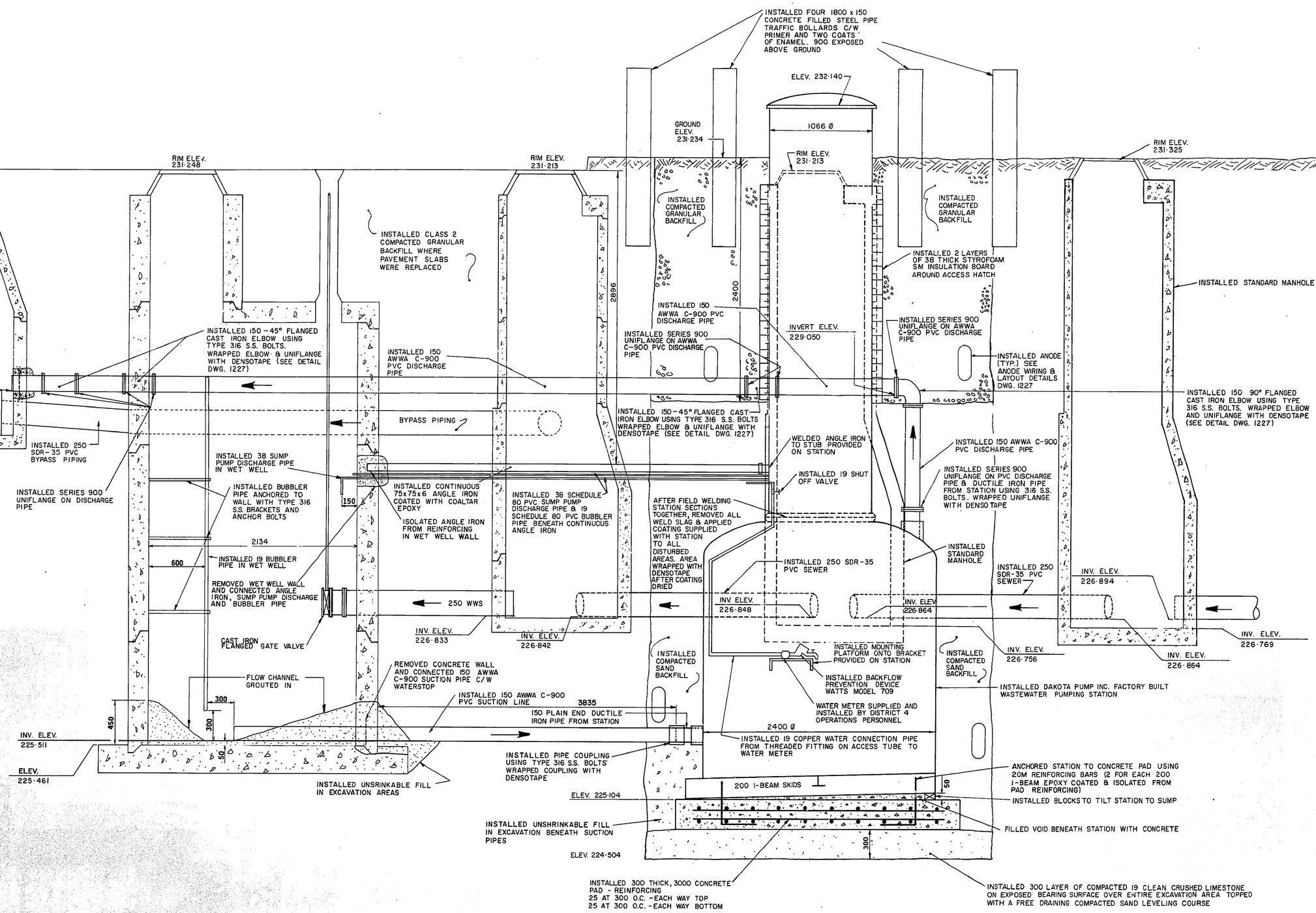

SECTION A-A
SCALE 1:20

AS-CONSTRUCTED
INSPECTION/SURVEY — TECHNICAL SERVICES — 88 02 15 DATE
WATERWORKS, WASTE & DISPOSAL DEPARTMENT

BM 11-060 ELEV 232.060	TBLT IN N. CONC. FOUNDATION OF BERTRUN E. GLAVIN SCHOOL		
1	REV'D TO AS CONSTRUCTED	01-1989	
NO	REVISIONS	DATE	BY

WORKS & OPERATIONS DIVISION
WATERWORKS, WASTE & DISPOSAL DEPARTMENT

DESIGNED BY C.T.	CHECKED BY R.A.S.
DRAWN BY M.B.D.	APPROVED BY
HOR SCALE / VERTICAL AS NOTED	RELEASED FOR CONSTRUCTION
DATE JANUARY 1988	DATE 88-02-11

ENGINEER — PROVINCE OF MANITOBA — R. A. SOROKOWSKI — REGISTERED PROFESSIONAL ENGINEER
CONSULTANT DRAWING NO.

THE CITY OF WINNIPEG
WORKS AND OPERATIONS DIVISION

LOUELDA FACTORY-BUILT WASTEWATER PUMPING STATION
SECTION A-A

CITY DRAWING NUMBER
SHEET 3 OF 6
1229

Hughes-Owens (Manitoba)
REF. OR DRAWING NO. 1229
DETAILS
Hughes-Owens (Manitoba) 1985 Ltd.
file # SP10356
file # SP10356