POWER

	DUPLEX RECEPTACLE
	GROUND FAULT CIRCUIT INTERRUPT RECEPTACLE
	QUADPLEX RECEPTACLE
	ELECTRICAL PANELBOARD - SURFACE MOUNTED
J	SQUARE JUNCTION BOX
	FIELD DEVICE EQUIPMENT
	EQUIPMENT LOAD
	LOCAL DISCONNECT SWITCH
	SITE POLE
	CONDUIT RUN DOWN
	CONDUIT RUN UP
	CONDUIT STUB END

GENERAL

1 / - — DETAIL / SECTION REFERENCE / DRAWING REFERENCE

ABBREVIATION / SYMBOL MODIFIER LIST

ITEM	DESCRIPTION
AFF	ABOVE FINISHED FLOOR
AFG	ABOVE FINISHED GRADE
CM	CEILING MOUNTED
EC	ELECTRICAL SUB-CONTRACTOR
FM	FLOOR MOUNTED
LV	LOW VOLTAGE
WP	WEATHERPROOF
15/20	T-SLOT (15A/20A) RECEPTACLE

GENERAL DEMOLITION NOTES

1. ELECTRICAL SUB-CONTRACTOR SHALL COMPLY WITH ALL APPLICABLE CODES AND STANDARDS.
2. PRIOR TO COMMENCEMENT OF ANY WORK, THE ELECTRICAL SUB-CONTRACTOR SHALL BE RESPONSIBLE FOR OBTAINING ALL REQUIRED PERMITS TO COMPLETE THE DEMOLITION SCOPE OF WORK.
3. THE ELECTRICAL SUB-CONTRACTOR SHALL BE RESPONSIBLE FOR MAKING SAFE THE AREA OF DEMOLITION AND FOR ENSURING THAT SAFETY PROCEDURES, PRACTICES AND OPERATIONS ARE FOLLOWED. ALL DEMOLITION AND MATERIAL SHALL BE SAFELY REMOVED TO ALLOW FUTURE CONSTRUCTION AND ALL DEBRIS DISPOSED OF ON A DAILY BASIS.
4. THE ELECTRICAL SUB-CONTRACTOR SHALL PROVIDE SAFETY AND DUST PROOF BARRIERS TO PROTECT ALL PUBLICLY OCCUPIED AREAS DURING THE DEMOLITION AND CONSTRUCTION PERIOD. ALL AREAS, FURNITURE, EQUIPMENT ETC. THAT ARE ADJACENT OR NOT A PART OF THE DEMOLITION AREA SHALL BE PROTECTED FROM DAMAGE.
5. ALL MATERIALS REMOVED DUE TO THE DEMOLITION OF EXISTING AREAS ARE OF THE CITY'S PROPERTY IN WHICH THE CITY HAS THE FIRST RIGHT TO CLAIM. ALL ITEMS THAT ARE NOT CLAIMED BY THE CITY SHALL BE THE RESPONSIBILITY OF THE ELECTRICAL SUB-CONTRACTOR TO REMOVE AND DISCARD FROM SITE.
6. NON-DEMOLITION ITEMS MAY BE SHOWN ON THE DRAWINGS TO DESCRIBE THE INTENT OF THE OVERALL SCOPE OF WORK AND TO AID THE ELECTRICAL SUB-CONTRACTOR WITH THEIR COORDINATION. THE ELECTRICAL SUB-CONTRACTOR SHALL FIELD VERIFY ALL DEVICE LOCATIONS.
7. WHERE CONDUITS ARE TO BE REMOVED WITHIN THE SCOPE OF WORK, ALL CONDUITS AND ASSOCIATED WIRING (I.E. FEEDER CIRCUIT WIRING) SHALL BE REMOVED BACK TO THEIR SOURCE AND NOT JUST TO THE NEAREST JUNCTION BOX.
8. ALL OBSOLETE/ABANDONED CABLING AND CONDUIT WITHIN CEILING SPACES THAT ARE AFFECTED BY THE AREA OF DEMOLITION SHALL BE COMPLETELY REMOVED.
9. WHERE ELECTRICAL EQUIPMENT HAS BEEN REMOVED, ALL WALLS/CEILINGS SHALL BE REPAIRED TO EXISTING CONDITIONS. SURFACES SHALL BE PATCHED AND PAINTED TO MATCH EXISTING.

GENERAL NOTES

1. DEVICE SYMBOLS SHOWN ON THE DRAWINGS AS A "GREY" LINE WEIGHT DENOTES THAT THEY ARE EXISTING.
2. COORDINATE THE CONNECTIONS OF ALL EQUIPMENT PROVIDED BY OTHERS WITH THE SUB-CONTRACTOR PROVIDING THE EQUIPMENT PRIOR TO ROUGH-IN. THIS INCLUDES, BUT IS NOT LIMITED TO RADIATION DETECTION SYSTEM EQUIPMENT, ETC. THE ELECTRICAL SUB-CONTRACTOR IS RESPONSIBLE TO PROVIDE THE APPROPRIATE DISCONNECTING MEANS FOR, AND TO MAKE THE FINAL CONNECTION TO, ANY HARDWIRED EQUIPMENT.
3. THE ELECTRICAL SUB-CONTRACTOR IS RESPONSIBLE FOR PRESERVING THE FIRE RATING OF ANY FIRE-RATED CEILING ASSEMBLIES.
4. ALL EQUIPMENT AND DEVICES SHALL BE SUITABLE FOR THE ENVIRONMENT IN WHICH THEY ARE INSTALLED. EQUIPMENT MOUNTED OUTDOORS SHALL BE NEMA 3R. DEVICES MOUNTED IN DAMP OR WET LOCATIONS SHALL BE WEATHERPROOF. RECEPTACLES RATED 15- OR 20- AMPS AND 120 VOLTS WHICH ARE LOCATED IN DAMP OR WET LOCATIONS SHALL BE GFCI PROTECTED AND EQUIPPED WITH A SUITABLE WEATHERPROOF COVERPLATE (WHILE-IN-USE IN WET LOCATIONS).
5. ELECTRICAL SUB-CONTRACTOR TO CONFIRM EXACT SIZE AND LOCATION AND WIRING REQUIREMENTS OF ALL RADIATION DETECTION SYSTEM WITH RADIATION DETECTION SYSTEM VENDOR PRIOR TO INSTALLATION OF ANY WIRING. ADJUST WIRING, BREAKERS, ETC. TO SUIT. ALL COSTS TO BE INCLUDED IN BASE BID QUOTE.

FIRE STOPPING NOTES

1. ALL ELECTRICAL WIRES, CABLES, NON-COMBUSTIBLE RACEWAYS, OUTLET BOXES AND OTHER SIMILAR SERVICES THAT PENETRATE FIRE WALLS, FIRE SEPARATIONS OR ASSEMBLIES AND THAT ARE REQUIRED TO HAVE A FIRE RESISTANCE RATING OR FIRE SEPARATION, SHALL BE SEALED BY FIRE STOP SYSTEM WHICH HAS AN "F" AND/OR "FT" RATING NOT LESS THAN THE REQUIRED FIRE PROTECTION RATING OF FIRE SEPARATION.
2. ELECTRICAL SUB-CONTRACTOR SHALL ONLY USE LISTED MATERIALS AND METHODS.
3. PROVIDE FOR FIRE STOPS IN CONCEALED SPACES AS REQUIRED BY THE CURRENT BUILDING CODE.
4. ALL FIRE RESISTANCE RATED ASSEMBLIES (I.E. WALLS CEILINGS, ETC.) WHICH CONTAIN PANEL BOARDS, BACK BOXES, RECESSED LIGHTING FIXTURES, ETC. SHALL BE C/W FIRE RATED BACKING TO MAINTAIN THE INTEGRITY OF THE FIRE RESISTANCE.

RADIATION DETECTION SYSTEM NOTES:

1. 'RADCOMM RADIATION DETECTION SYSTEMS' WAS USED AS AS THE BASIS OF DESIGN. THE ELECTRICAL SUB-CONTRACTOR SHALL COORDINATE WITH THE APPROVED MANUFACTURER FOR EXACT SYSTEM REQUIREMENTS PRIOR TO BID.
2. ALL CABLING SHALL BE SHIELDED TWISTED PAIR, UNDERGROUND RATED MINIMUM SPEC. COORDINATE THE EXACT CABLING REQUIREMENTS WITH RADIATION DETECTION VENDOR.
3. THE RADIATION DETECTION SYSTEM INTERFACE / SOFTWARE SHALL BE INSTALLED ON PC'S IN THE SCALE BUILDING SUPPLIED BY THE CITIES IST DEPARTMENT. THE AWARED GENERAL CONTRACTOR SHALL COORDINATE THE EXACT PC REQUIREMENT WITH THE CITIES IST DEPARTMENT.

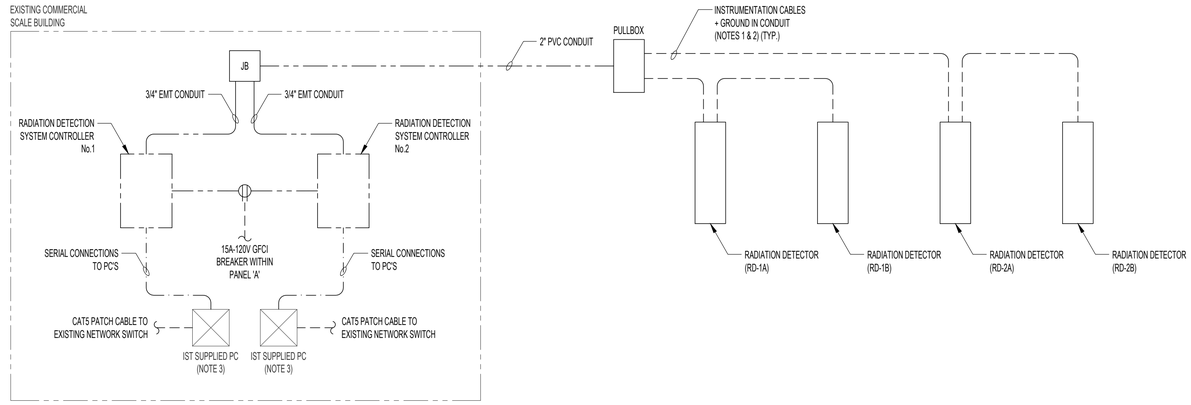

A / - COMMERCIAL SCALE BUILDING - RADIATION DETECTION SYSTEM BLOCK DIAGRAM
SCALE: N.T.S.

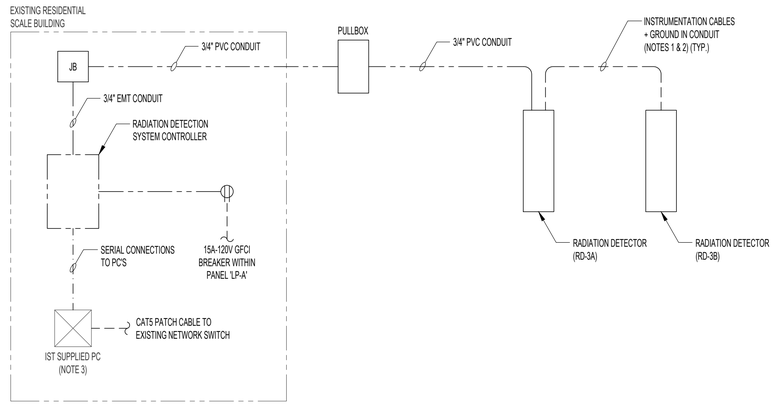

B / - RESIDENTIAL SCALE BUILDING - RADIATION DETECTION SYSTEM BLOCK DIAGRAM
SCALE: N.T.S.

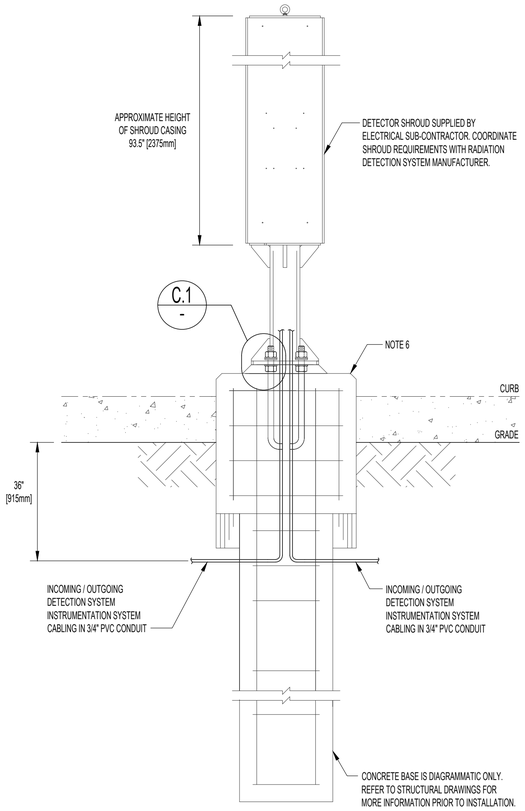

C / - DETECTOR BASE DETAIL
SCALE: N.T.S.

DETAIL NOTES:

1. COORDINATE CONDUIT AND CABLE REQUIREMENTS WITH RADIATION DETECTION SYSTEM VENDOR PRIOR TO BID.
2. COORDINATE THE BOLT CIRCLE AND ANCHOR BOLT SIZE WITH STRUCTURAL DRAWINGS, GENERAL CONTRACTOR, AND SHOP DRAWINGS.
3. COORDINATE THE DETECTOR SHROUD SIZE WITH STRUCTURAL DRAWINGS, GENERAL CONTRACTOR, AND SHOP DRAWINGS.
4. PROVIDE UV RESISTANT RUBBER LUG CAPS. COLOR TO MATCH DETECTOR SHROUD.
5. PROVIDE HOT DIPPED GALVANIZED ANCHOR BOLTS AND HARDWARE.
6. TOP OF PILE TO BE FLUSH WITH EXISTING SCALE DECK.

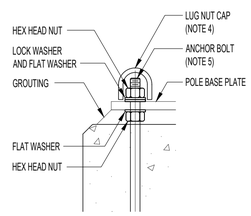

C.1 / - ANCHOR DETAIL
SCALE: N.T.S.

ENGINEERS GEOSCIENTISTS MANITOBA
Certificate of Authorization
KGS Group
No. 245

LOCATION APPROVED
UNDERGROUND STRUCTURES

SUPV. U/G STRUCTURES COMMITTEE — DATE

NOTE:
LOCATION OF UNDERGROUND STRUCTURES AS SHOWN ARE BASED ON THE BEST INFORMATION AVAILABLE BUT NO GUARANTEE IS GIVEN THAT ALL EXISTING UTILITIES ARE SHOWN OR THAT THE GIVEN LOCATIONS ARE EXACT. CONFIRMATION OF EXISTENCE AND EXACT LOCATION OF ALL SERVICES MUST BE OBTAINED FROM THE INDIVIDUAL UTILITIES BEFORE PROCEEDING WITH CONSTRUCTION.

B.M.
ELEV.

NO.	REVISIONS	DATE	BY
0	ISSUED FOR CONSTRUCTION	20/11/27	CLS

KGS GROUP

DESIGNED BY	SDC	CHECKED BY	CLS
DRAWN BY	SDC	APPROVED BY	CLS
HOR. SCALE:	AS NOTED	RELEASED FOR CONSTRUCTION:	
VERTICAL:	AS NOTED		20/11/27
DATE	20/10/13	DATE	20/11/27

ENGINEER'S SEAL
PROVINCE OF MANITOBA
C.L. SARARAS
Member
32618
REGISTERED PROFESSIONAL ENGINEER
2020-11-24

CONSULTANT PROJECT NO.
20-0107-12

Winnipeg
THE CITY OF WINNIPEG
WATER AND WASTE DEPARTMENT

PROJECT TITLE
BRADY ROAD RESOURCE MANAGEMENT FACILITY
RADIATION DETECTION SYSTEM

SYMBOL LEGEND, GENERAL NOTES, DETAILS, AND DRAWING LIST

SHEET 1 OF 4
COMPUTER FILE NAME 839-2020-Drawing_20-0107-012_E01
CONSULTANT DRAWING NUMBER E01

Filename: \\k-file-4\p-data\Projects\2020\20-0107-012\Dwg\Elec\839-2020_Drawing_20-0107-012_E01-R0 – Tab:E01 Plotted By: scampbell 20/11/24 [Tue 1:54pm]