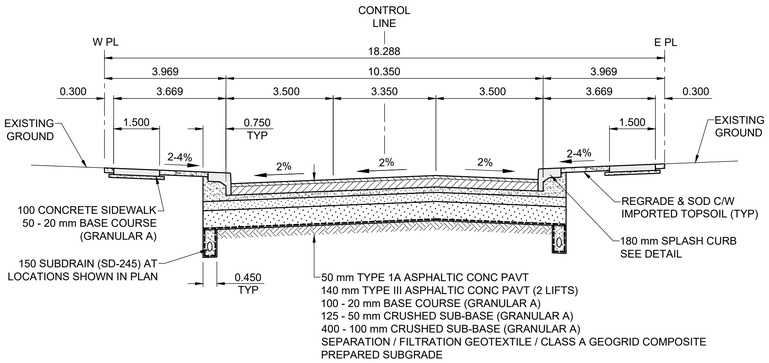

TYPICAL PAVEMENT SECTION

SCALE: 1:100 H
0 2.0 4.0m
0 1.0 2.0m
SCALE 1:50 V

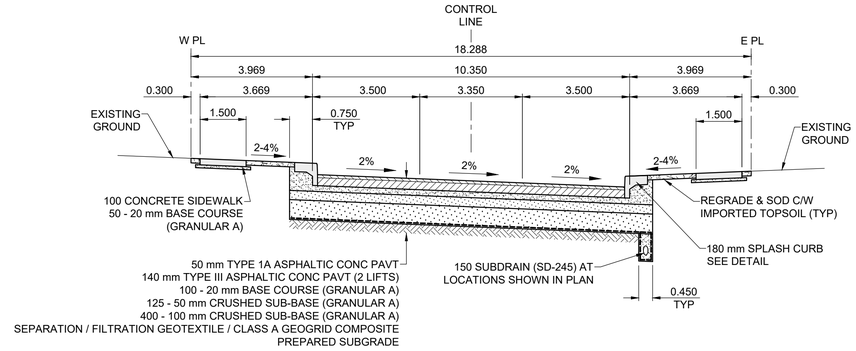

SUPER ELEVATED PAVEMENT SECTION

SCALE: 1:100 H
0 2.0 4.0m
0 1.0 2.0m
SCALE 1:50 V

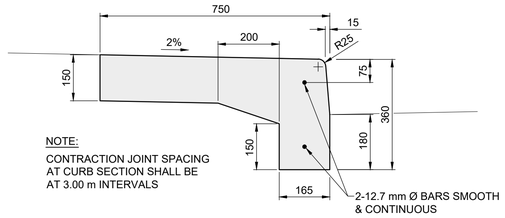

SPLASH CURB FOR ASPHALTIC CONCRETE PAVEMENT

SCALE: 1:10
0 0.25 0.50m

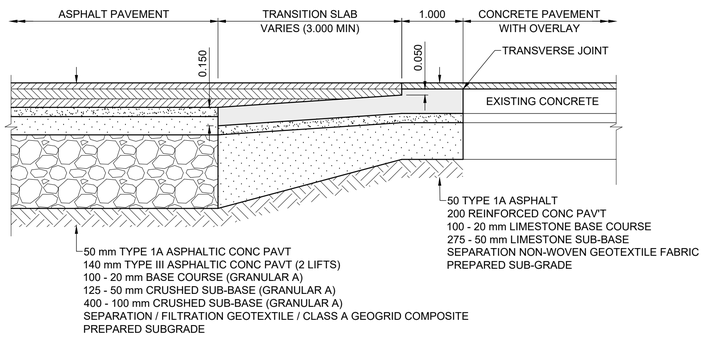

NOTE: APPLICABLE TO ELLICE & NOTRE DAME INTERSECTION

TRANSITION SLAB - ASPHALT TO CONCRETE W/OVERLAY

SCALE: 1:50 H
0 1.0 2.0m
0 0.5 1.0m
SCALE 1:25 V

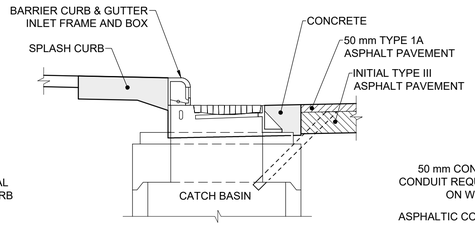

SECTION A

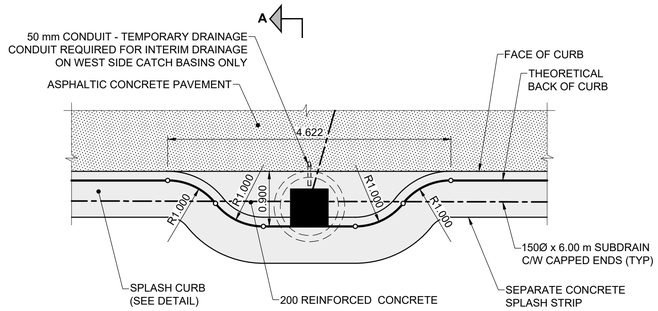

RECESSED CATCH BASIN INLET DETAIL

SCALE: 1:50
0 0.5 1.0 2.0 3.0m

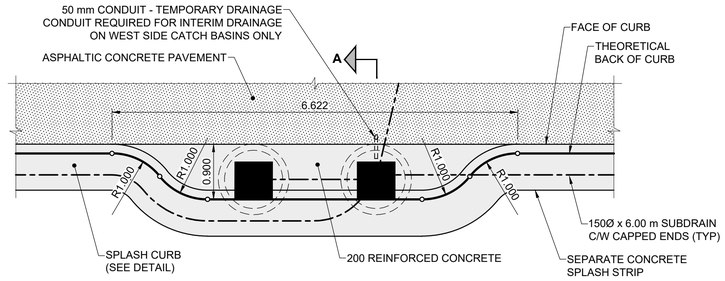

DOUBLE RECESSED CATCH BASIN INLET DETAIL

SCALE: 1:50
0 0.5 1.0 2.0 3.0m

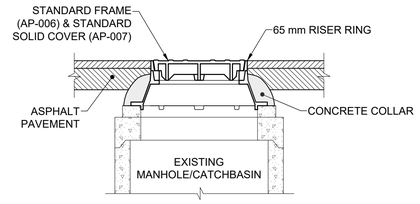

CONCRETE COLLAR DETAIL FOR MANHOLES IN ASPHALT PAVEMENT

SCALE: 1:20

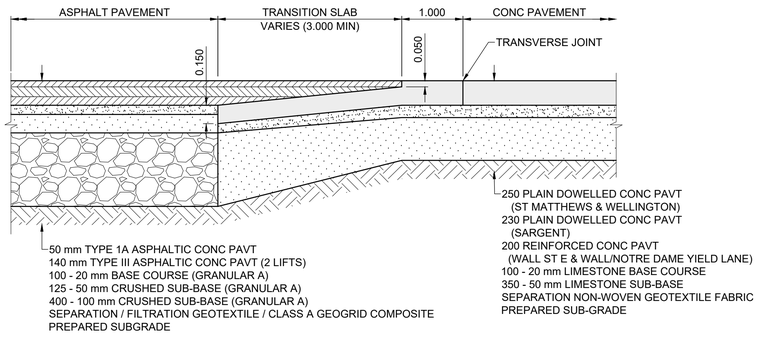

NOTE: APPLICABLE TO ST MATTHEWS, SARGENT, WELLINGTON, WALL ST E & WALL/NOTRE DAME YIELD LANE INTERSECTIONS

TRANSITION SLAB - ASPHALT TO CONCRETE

SCALE: 1:50 H
0 1.0 2.0m
0 0.5 1.0m
SCALE 1:25 V

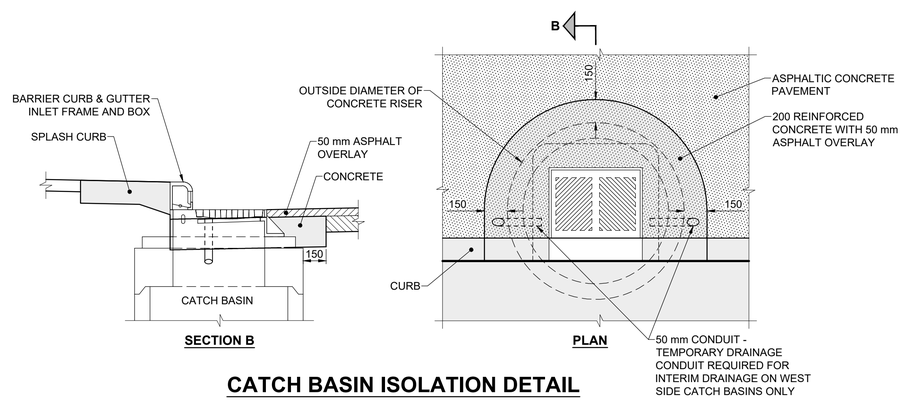

SECTION B **PLAN**

CATCH BASIN ISOLATION DETAIL

SCALE: 1:20
0 0.5 1.0m

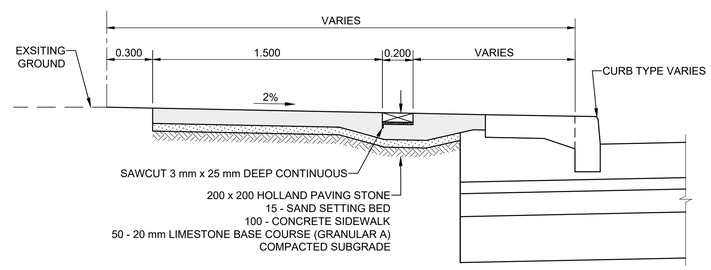

SIDEWALK SECTION WITH PAVING STONE BAND

SCALE: 1:20
0 0.5 1.0m

ENGINEERS GEOSCIENTISTS MANITOBA
Certificate of Authorization
MORRISON HERSHFIELD
No. 1736

TENDER No. 538-2020

METRIC
WHOLE NUMBERS INDICATE MILLIMETRES
DECIMALIZED NUMBERS INDICATE METRES

LOCATION APPROVED
UNDERGROUND STRUCTURES

SUPR. U/G STRUCTURES COMMITTEE — DATE

NOTE:
LOCATION OF UNDERGROUND STRUCTURES AS SHOWN ARE BASED ON THE BEST INFORMATION AVAILABLE BUT NO GUARANTEE IS GIVEN THAT ALL EXISTING UTILITIES ARE SHOWN OR THAT THE GIVEN LOCATIONS ARE EXACT. CONFIRMATION OF EXISTENCE AND EXACT LOCATION OF ALL SERVICES MUST BE OBTAINED FROM THE INDIVIDUAL UTILITIES BEFORE PROCEEDING WITH CONSTRUCTION.

BM 37-59 ELEV 233.277 m — NE Cor. Erin St. & Richard Ave., Tblt. in W. Conc. foundation No. 1525 Erin St., 1 m N. & 0.7 m below brick of S.W. Cor. of Bldg.

No.	REVISIONS	YY/MM/DD	BY
B	ISSUED FOR TENDER	20/11/16	RPB
A	ISSUED FOR CLIENT REVIEW	20/08/05	RPB

MORRISON HERSHFIELD

DESIGNED BY	WRJ	CHECKED BY	RPB
DRAWN BY	DML	APPROVED BY	BWB
HOR SCALE		RELEASED FOR CONSTRUCTION	
VERT SCALE			
DATE	20/08/05	DATE	

PROFESSIONAL'S SEAL
PRELIMINARY DRAWING
NOT TO BE USED FOR CONSTRUCTION

CONSULTANT FILE NAME
1903792-Wall-XS-01.dwg

Winnipeg
THE CITY OF WINNIPEG
PUBLIC WORKS DEPARTMENT
ENGINEERING DIVISION

2021-2022 REGIONAL STREET RENEWAL PROGRAM
WALL STREET RECONSTRUCTION
ST MATTHEWS AVE TO NOTRE DAME AVE

SECTIONS AND DETAILS

CITY DRAWING NUMBER: P-3530-26
SHEET 26 OF 26
DRAWING NUMBER: 26

ISO A1 - 594mm x 841mm
P:\2019\1903792\00-2019-2023 Erin-Wall-Sargent Street\09_CAD\07 Sheets\Wall Street\1903792-Wall-XS-01.dwg Last Saved: 11/19/2020 8:35 PM by DLane Plotted: 11/19/2020 8:42 PM by Dave Lane