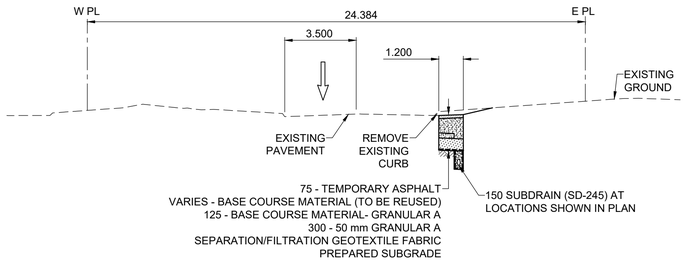

G 39 43 STAGE 4 SECTION - STA 0+990

SCALE: 1:150 H
0 5.0m
0 2.5m
SCALE 1:75 V

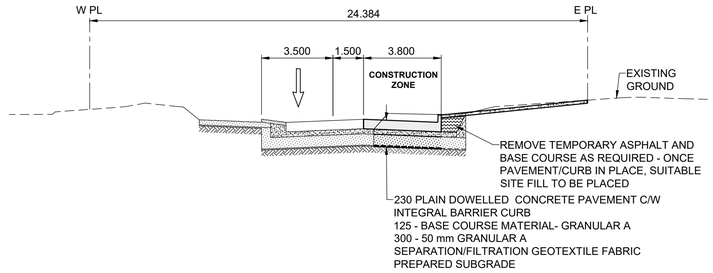

J 41 43 STAGE 7&8 SECTION - STA 0+990

SCALE: 1:150 H
0 5.0m
0 2.5m
SCALE 1:75 V

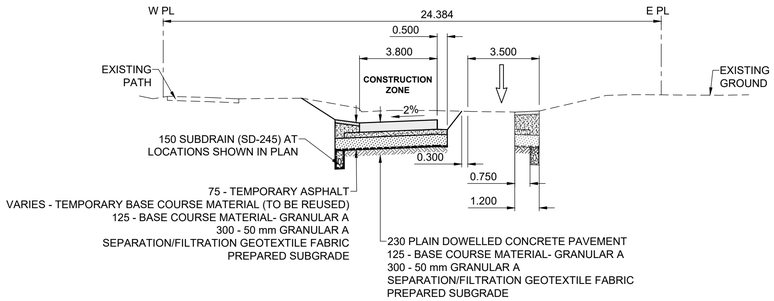

H 40 43 STAGE 5&6 SECTION - STA 0+250

SCALE: 1:150 H
0 5.0m
0 2.5m
SCALE 1:75 V

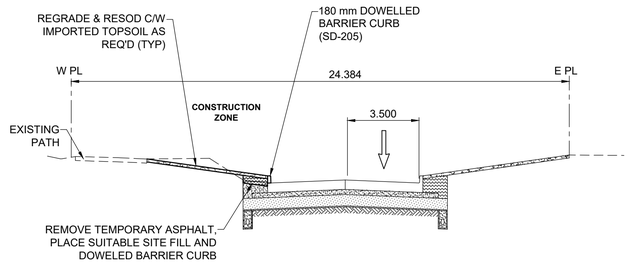

K 42 43 STAGE 9 SECTION - STA 0+250

SCALE: 1:150 H
0 5.0m
0 2.5m
SCALE 1:75 V

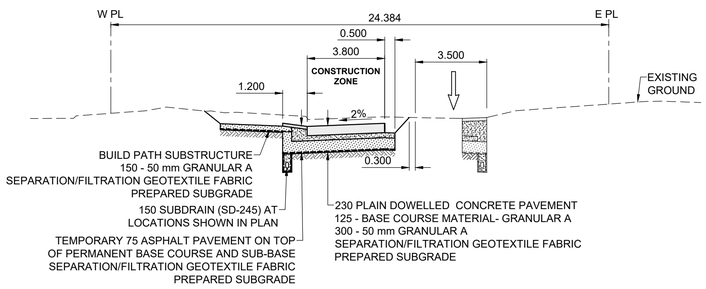

I 40 43 STAGE 5&6 SECTION - STA 0+990

SCALE: 1:150 H
0 5.0m
0 2.5m
SCALE 1:75 V

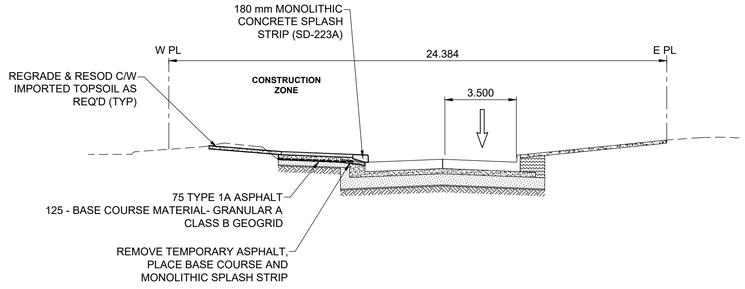

L 42 43 STAGE 9 SECTION - STA 0+990

SCALE: 1:150 H
0 5.0m
0 2.5m
SCALE 1:75 V

ISO A1 - 594mm x 841mm

P:\2019\19038\100-Sherwin Road Reconstruction\09_CAD\07 Sheets\Roadworks\1903811-Sherwin-ST-08.dwg Last Saved: 7/14/2020 1:51 PM by DLane Plotted: 7/14/2020 2:34 PM by Dave Lane

METRIC
WHOLE NUMBERS INDICATE MILLIMETRES
DECIMALIZED NUMBERS INDICATE METRES

LOCATION APPROVED
UNDERGROUND STRUCTURES

SUPR. U/G STRUCTURES COMMITTEE — DATE

NOTE:
LOCATION OF UNDERGROUND STRUCTURES AS SHOWN ARE BASED ON THE BEST INFORMATION AVAILABLE BUT NO GUARANTEE IS GIVEN THAT ALL EXISTING UTILITIES ARE SHOWN OR THAT THE GIVEN LOCATIONS ARE EXACT. CONFIRMATION OF EXISTENCE AND EXACT LOCATION OF ALL SERVICES MUST BE OBTAINED FROM THE INDIVIDUAL UTILITIES BEFORE PROCEEDING WITH CONSTRUCTION.

BM 23-018
ELEV 235.300 m
S.E. Cor. Notre Dame Ave. & Sherwin Rd., Tblt. in W. Conc. foundation No. 2070 Notre Dame Ave., 0.8 m S. & 0.7 m below Conc. block of N.W. Cor. of bldg.

No.	REVISIONS	YY/MM/DD	BY
C	ISSUED FOR TENDER	20/07/17	JGK
B	ISSUED FOR CLIENT REVIEW	20/05/26	GFC
A	ISSUED FOR PRELIMINARY DESIGN	19/12/13	GFC

MORRISON HERSHFIELD

DESIGNED BY	GFC	CHECKED BY	JGK
DRAWN BY	KMB	APPROVED BY	BWB
HOR SCALE	N/A	RELEASED FOR CONSTRUCTION	
VERT SCALE	N/A		
DATE	19/11/28	DATE	

PROFESSIONAL'S SEAL
PRELIMINARY DRAWING
NOT TO BE USED FOR CONSTRUCTION

CONSULTANT FILE NAME
1903811-Sherwin-ST-08.dwg

ENGINEERS GEOSCIENTISTS MANITOBA
Certificate of Authorization
MORRISON HERSHFIELD
No. 1736

TENDER No. 24-2020

Winnipeg
THE CITY OF WINNIPEG
PUBLIC WORKS DEPARTMENT
ENGINEERING DIVISION

SHERWIN ROAD RECONSTRUCTION AND CULVERT REPLACEMENT OVER OMAND'S CREEK
SASKATCHEWAN AVE TO NOTRE DAME AVE

STAGING - SECTIONS

CITY DRAWING NUMBER: P-3531-27
SHEET 43 OF 44
DRAWING NUMBER: 43