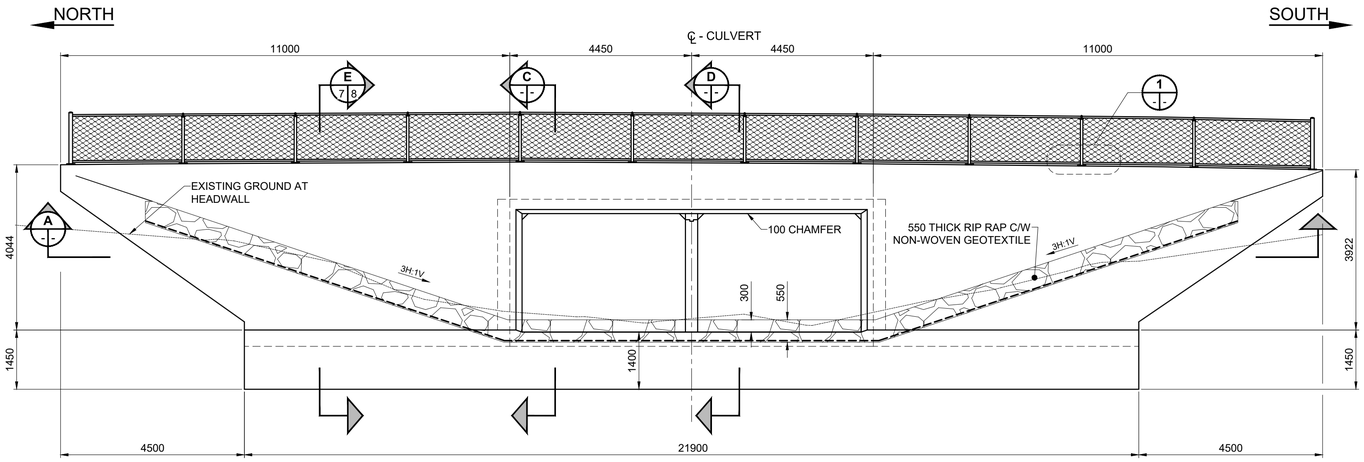

CULVERT INLET ELEVATION

SCALE 1:75

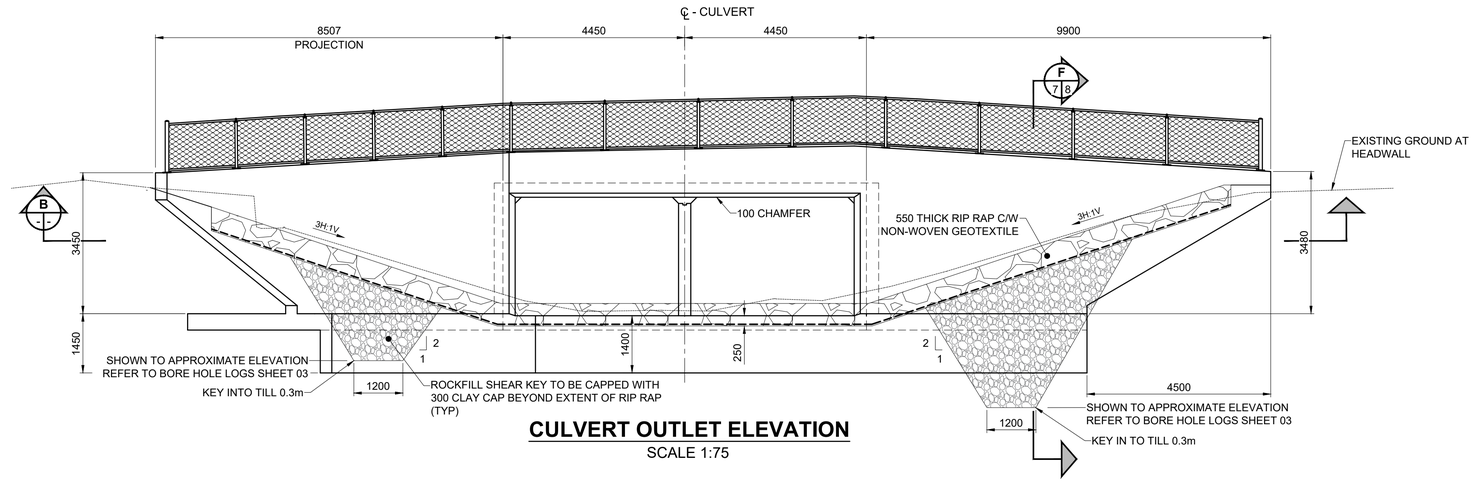

CULVERT OUTLET ELEVATION

SCALE 1:75

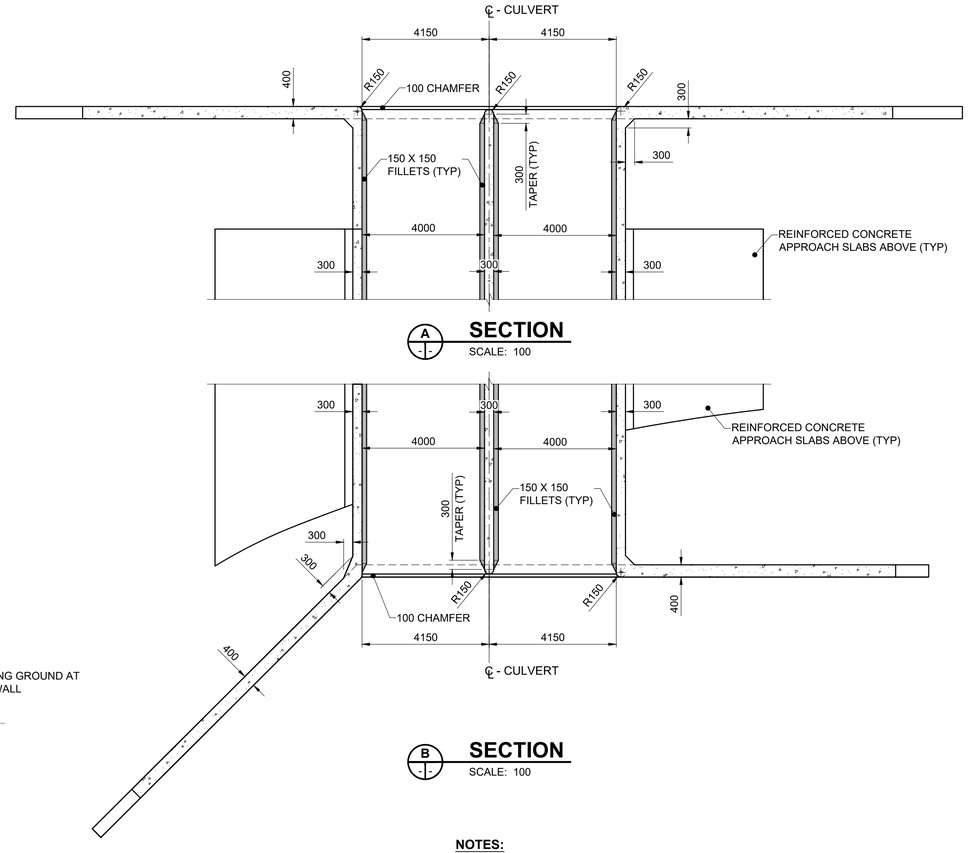

NOTES:

1. ALL EXPOSED EDGES OF BARREL AND HEADWALLS TO BE CHAMFERED 20 mm EXCEPT WHERE NOTED OTHERWISE.
2. CONSTRUCTION JOINTS AS PER DETAILS. CONSTRUCTION JOINTS EXTENDING INTO HEADWALL MUST BE NEAT AND LEVEL.
3. AREAS TO BE "PERMEABLE FORMWORK" LINER FINISH:
   a. ALL EXPOSED SURFACES OF HEADWALLS
   b. ALL ROUND FACES OF ENTRANCE TO CULVERT
4. ALL VERTICAL SURFACES IN CONTACT WITH BACKFILL MATERIAL TO BE ASPHALT WATERPROOFED.

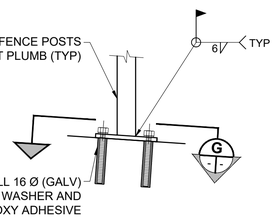

1 **DETAIL**

FENCE POST TO WINGWALL/HEADWALL CONNECTION

SCALE: 1:10

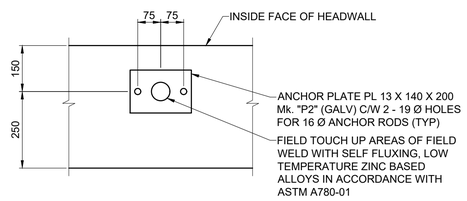

G **SECTION**

SCALE: 1:10

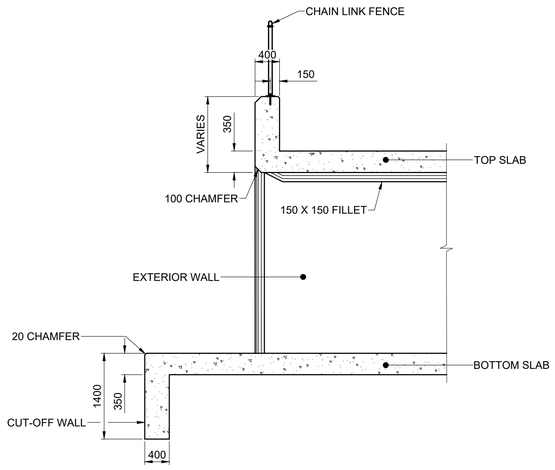

C **SECTION**

WEST SECTION SHOWN EAST SECTION SIMILAR

SCALE: 1:50

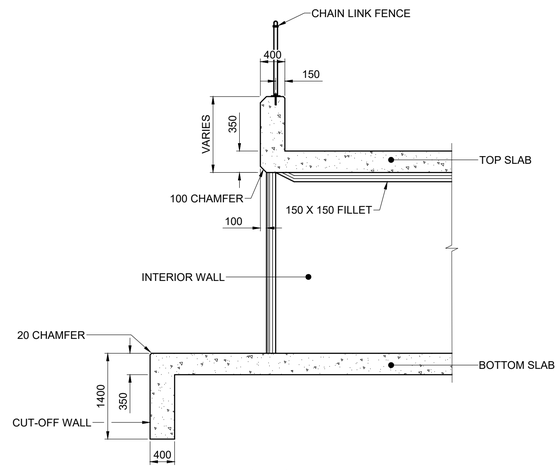

D **SECTION**

WEST SECTION SHOWN EAST SECTION SIMILAR

SCALE: 1:50

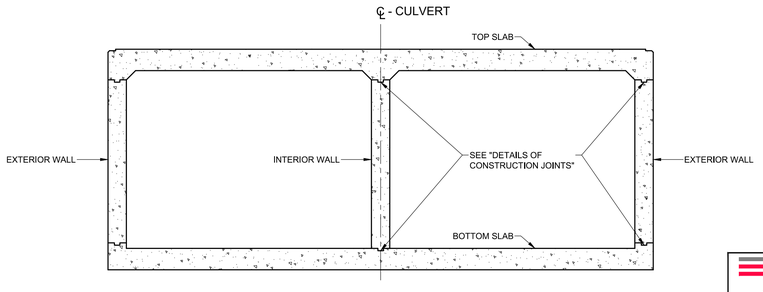

TYPICAL CROSS SECTION

SCALE 1:50

ENGINEERS GEOSCIENTISTS MANITOBA
Certificate of Authorization
MORRISON HERSHFIELD
No. 1736

METRIC
WHOLE NUMBERS INDICATE MILLIMETRES
DECIMALIZED NUMBERS INDICATE METRES

LOCATION APPROVED
UNDERGROUND STRUCTURES

SUPR, U/G STRUCTURES COMMITTEE — DATE

NOTE:
LOCATION OF UNDERGROUND STRUCTURES AS SHOWN ARE BASED ON THE BEST INFORMATION AVAILABLE BUT NO GUARANTEE IS GIVEN THAT ALL EXISTING UTILITIES ARE SHOWN OR THAT THE GIVEN LOCATIONS ARE EXACT. CONFIRMATION OF EXISTENCE AND EXACT LOCATION OF ALL SERVICES MUST BE OBTAINED FROM THE INDIVIDUAL UTILITIES BEFORE PROCEEDING WITH CONSTRUCTION.

BM 23-018 ELEV 235.300 m — S.E. Cor. Notre Dame Ave. & Sherwin Rd., Tblt. in W. Conc. foundation No. 2070 Notre Dame Ave., 0.8 m S. & 0.7 m below Conc. block of N.W. Cor. of bldg.

No.	REVISIONS	YY/MM/DD	BY
D	ISSUED FOR TENDER	20/07/15	BE
C	ISSUED FOR 100% REVIEW	20/07/10	BE
B	ISSUED FOR 95% REVIEW	20/05/26	BE
A	ISSUED FOR 50% REVIEW	20/04/08	BE

MORRISON HERSHFIELD

DESIGNED BY	TN	CHECKED BY	AGG
DRAWN BY	AH	APPROVED BY	BE
HOR SCALE	AS SHOWN	RELEASED FOR CONSTRUCTION	
VERT SCALE			
DATE		DATE	

PROFESSIONAL'S SEAL
PRELIMINARY DRAWING
NOT TO BE USED FOR CONSTRUCTION

CONSULTANT FILE NAME
1903811 - SHERWIN - CONC DETAILS 1.DWG

Winnipeg
THE CITY OF WINNIPEG
PUBLIC WORKS DEPARTMENT
ENGINEERING DIVISION

RECONSTRUCTION OF SHERWIN ROAD AND REPLACEMENT OF EXISTING CULVERT AT OMAND'S CREEK

CONCRETE DETAILS 1

CITY DRAWING NUMBER: C319-20-07
SHEET 07 OF 44
DRAWING No. 07 REV

TENDER No. 24-2020

ISO A1 - 594mm x 841mm
P:\2019\1903811\00-Sherwin Road Reconstruction\09. CAD\07 Sheets\Structural\1903811 - Sherwin - CONC DETAILS 1.dwg Last Saved: 7/15/2020 9:49 AM by AHeppner Plotted: 7/15/2020 10:49 AM by Alex Heppner