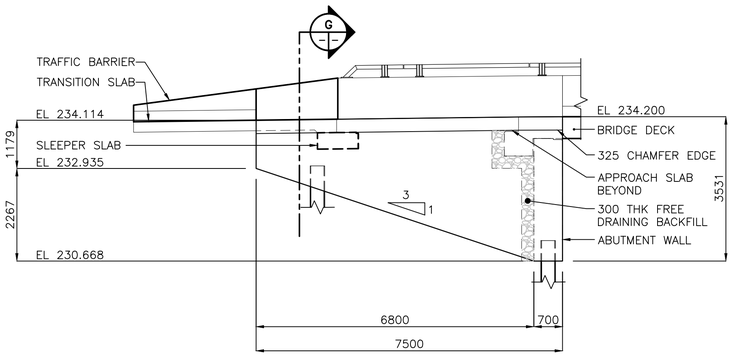

A 7/8 NE WINGWALL ELEVATION
1:75

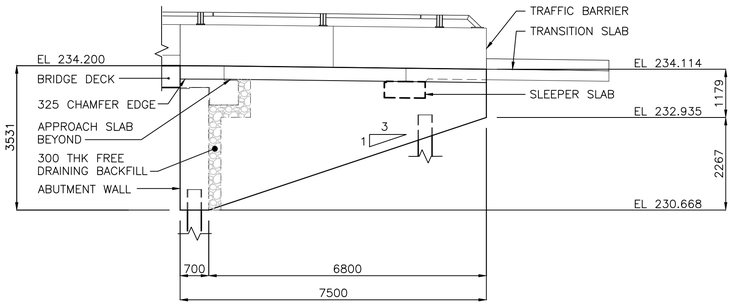

B 7/8 NW WINGWALL ELEVATION
1:75

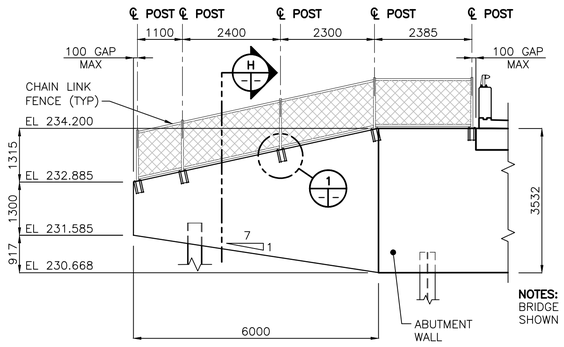

C 7/8 SW WINGWALL ELEVATION
1:75

NOTES:
BRIDGE DECK NOT SHOWN FOR CLARITY

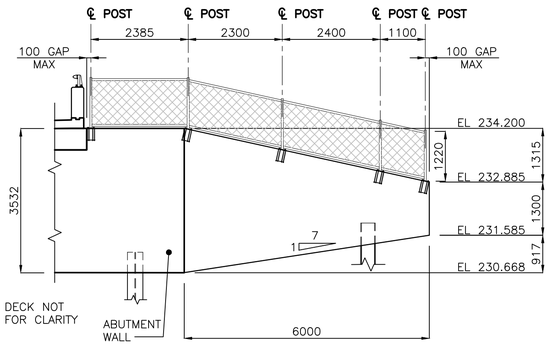

D 7/8 SE WINGWALL ELEVATION
1:75

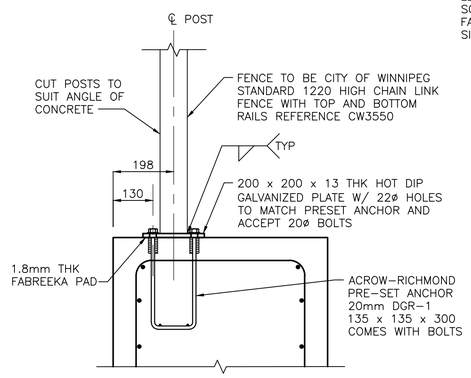

1 DETAIL
1:10

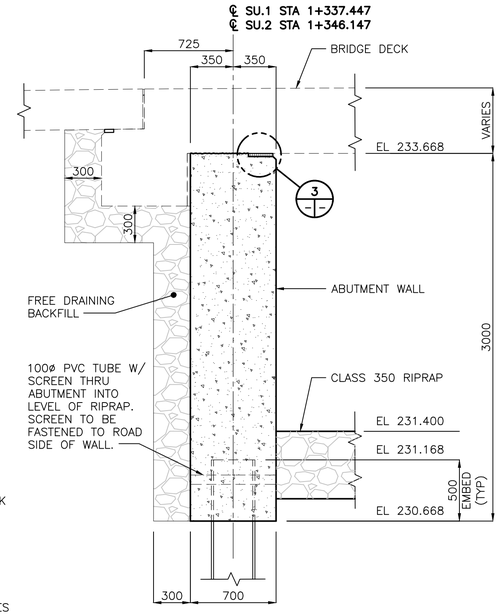

E 7/8 SECTION
1:25

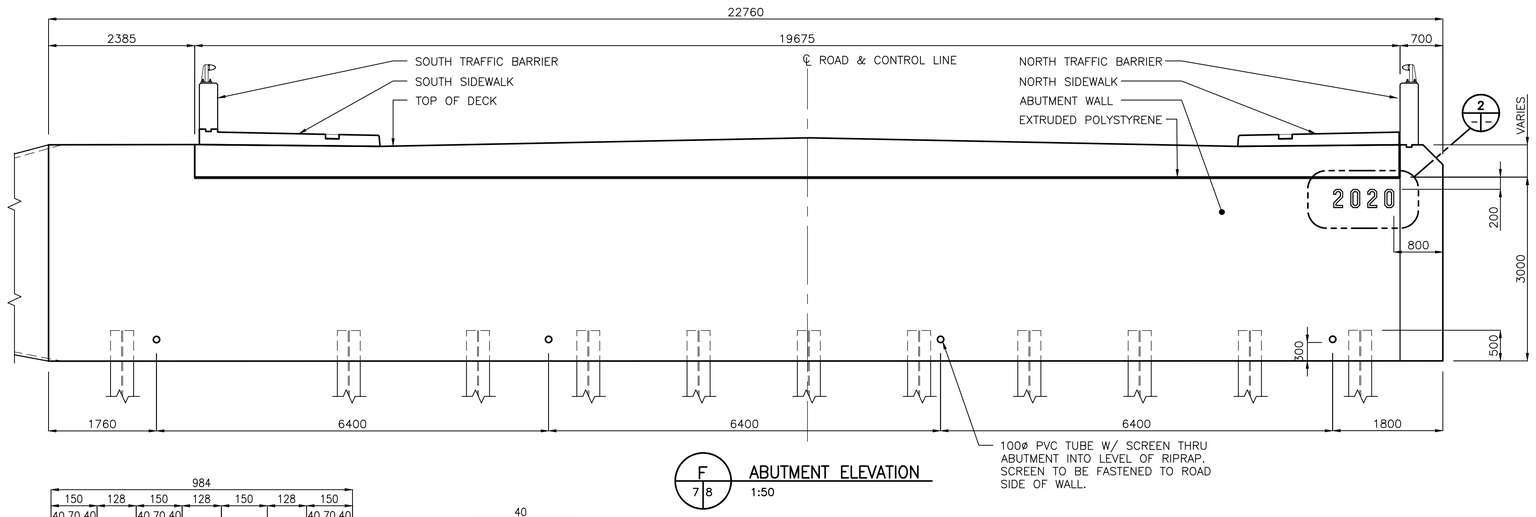

F 7/8 ABUTMENT ELEVATION
1:50

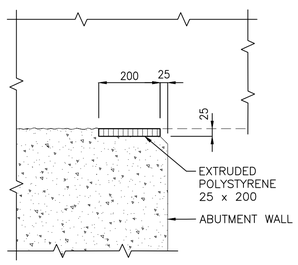

3 DETAIL
1:10

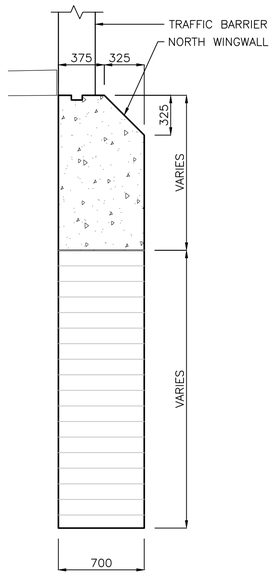

G 7/8 SECTION
1:25

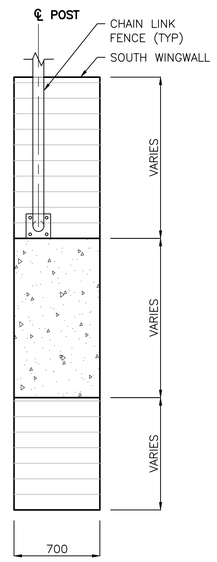

H 7/8 SECTION
1:25

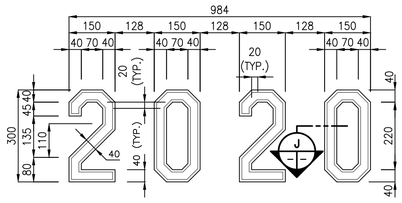

2 7/8 DETAIL – DATE MARKER
1:10

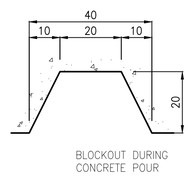

J 7/8 SECTION
1:1

APEGM
Certificate of Authorization
Stantec Consulting Ltd.
No. 1301

METRIC
WHOLE NUMBERS INDICATE MILLIMETRES
DECIMALIZED NUMBERS INDICATE METRES

LOCATION APPROVED
UNDERGROUND STRUCTURES

SUPV. U/G STRUCTURES COMMITTEE — DATE

NOTE:
LOCATION OF UNDERGROUND STRUCTURES AS SHOWN ARE BASED ON THE BEST INFORMATION AVAILABLE BUT NO GUARANTEE IS GIVEN THAT ALL EXISTING UTILITIES ARE SHOWN OR THAT THE GIVEN LOCATIONS ARE EXACT. CONFIRMATION OF EXISTENCE AND EXACT LOCATION OF ALL SERVICES MUST BE OBTAINED FROM THE INDIVIDUAL UTILITIES BEFORE PROCEEDING WITH CONSTRUCTION.

B.M. ELEV.

NO.	REVISIONS	DATE	BY
0	ISSUED FOR TENDER	19.09.18	J.M.B.

Stantec
500 - 311 Portage Avenue, Winnipeg MB Canada
www.stantec.com

DESIGNED BY	H.M.V.	CHECKED BY	C.D.
DRAWN BY	J.M.B.	APPROVED BY	K.S.A.
HOR. SCALE: VERTICAL:	1:75 OR AS NOTED	RELEASED FOR CONSTRUCTION:	
DATE	2019.09.18	DATE	

ENGINEER'S SEAL
TENDER DRAWING
NOT TO BE USED FOR CONSTRUCTION

CONSULTANT DRAWING NO.
S-105

Winnipeg
THE CITY OF WINNIPEG
PUBLIC WORKS DEPARTMENT
ENGINEERING DIVISION

DUBLIN AVENUE BRIDGE REPLACEMENT
PROPOSED BRIDGE STRUCTURE
SUBSTRUCTURE SECTIONS & DETAILS

SHEET 8 OF 48
CAD FILE DRAWING NUMBER 33340s-105-926.dwg
CITY DRAWING NUMBER B105-19-8

U:\133733401\0300_drawing\0320_sheet_files\03_structure\33340s-105-926.dwg
2019/09/18 2:01 PM By: Hare, Jake