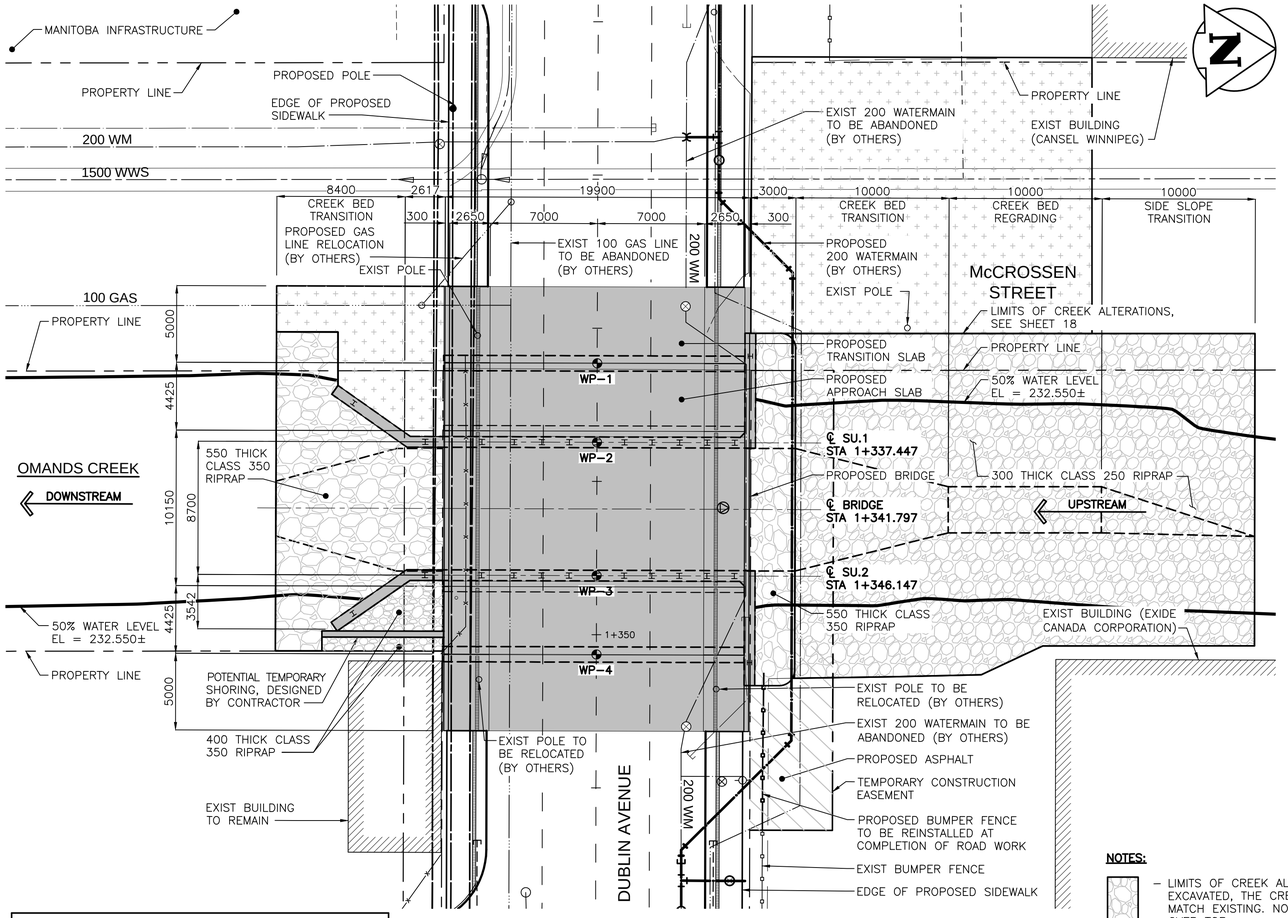

BRIDGE PLAN
1:200

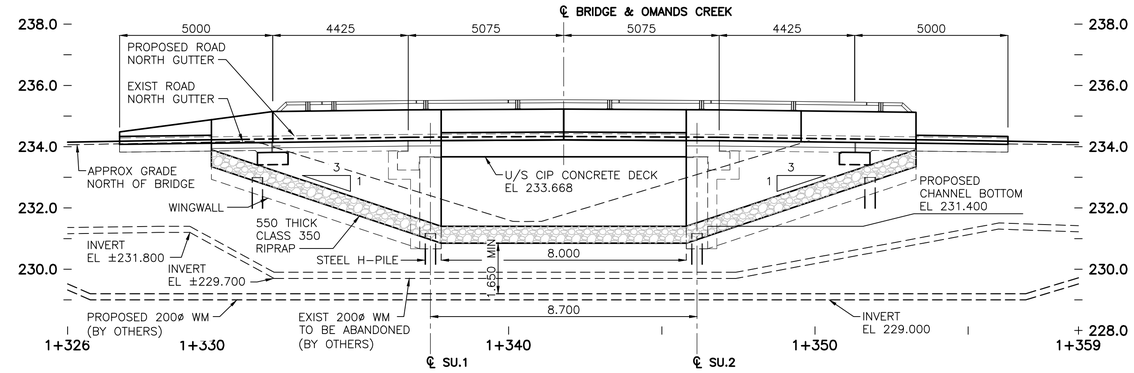

BRIDGE ELEVATION – NORTH END
1:100

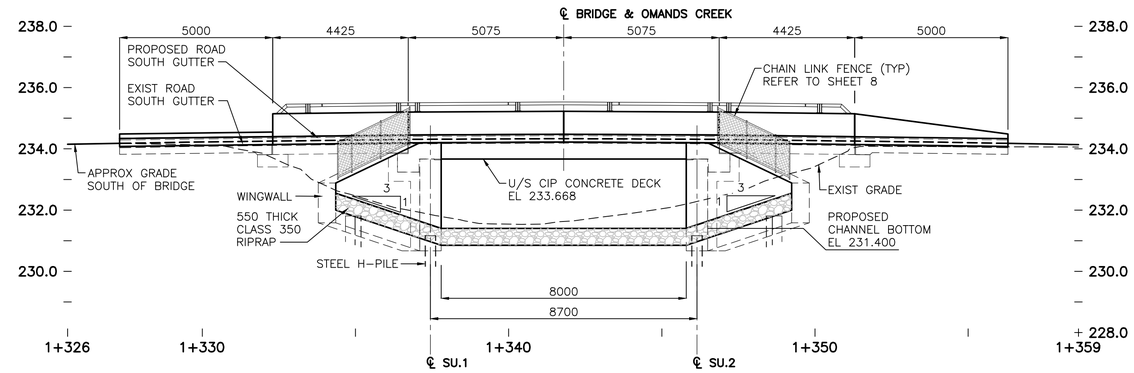

BRIDGE ELEVATION – SOUTH END
1:100

WORK POINT LOCATION

BM.	NORTHING	EASTING	ELEVATION	DESCRIPTION
WP-1	5530331.307	629564.571	233.813	T/O SLEEPER SLAB
WP-2	5530330.917	629578.415	233.669	T/O ABUTMENT WALL
WP-3	5530331.162	629569.719	233.669	T/O ABUTMENT WALL
WP-4	5530330.772	629583.563	233.813	T/O SLEEPER SLAB

NOTES:

– LIMITS OF CREEK ALTERATIONS, CREEK BED AND SLOPES TO BE EXCAVATED, THE CREEK BED REGRADED AND CHANNEL ALTERED TO MATCH EXISTING. NON-WOVEN GEOTEXTILE AND RIPRAP TO BE REPLACED OVER TOP.

– THE REQUIREMENT FOR, AND GEOMETRY OF, A TEMPORARY RETAINING WALL TO ALLOW FOR THE COMPLETION OF THE WORK WITHOUT EFFECTING THE EXISTING BRIDGE TO BE DETERMINED BY THE CONTRACTOR. THE DESIGN OF THE TEMPORARY WALL TO BE COMPUTED BY THE CONTRACTOR.

– APPROX AREA OF REGRADE AND ESTABLISH NATURALIZATION.

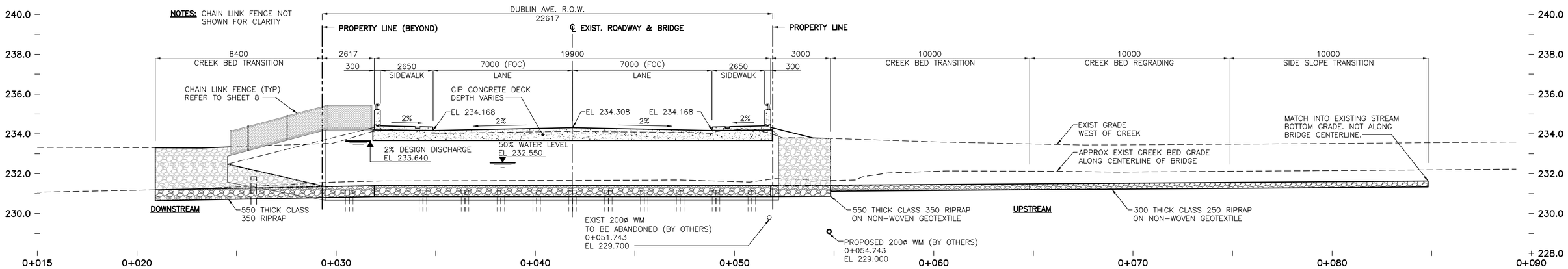

BRIDGE SECTION / CREEK PROFILE
1:100

EXISTING	LEGEND – PLAN	NEW	EXISTING	LEGEND – PLAN	NEW	EXISTING	LEGEND – PLAN	NEW
	GAS			EXISTING GRADE				
	MTS			TRAFFIC SIGN				
	ABANDONED MTS			MANHOLE				
	WATERMAIN			WATER VALVE				
	ABANDONED WATERMAIN			FIRE HYDRANT				
	WWS			SURVEY BAR				
	TEMPORARY / EXISTING FENCE			EXISTING BUILDING				
	WOOD PARKING BARRIER							
	PROPERTY LINE							
	SEWER LINE							
	ANTICIPATED RIVER REGRADING							

LOCATION APPROVED
UNDERGROUND STRUCTURES

SUPV. U/G STRUCTURES COMMITTEE — DATE

NOTE:
LOCATION OF UNDERGROUND STRUCTURES AS SHOWN ARE BASED ON THE BEST INFORMATION AVAILABLE BUT NO GUARANTEE IS GIVEN THAT ALL EXISTING UTILITIES ARE SHOWN OR THAT THE GIVEN LOCATIONS ARE EXACT. CONFIRMATION OF EXISTENCE AND EXACT LOCATION OF ALL SERVICES MUST BE OBTAINED FROM THE INDIVIDUAL UTILITIES BEFORE PROCEEDING WITH CONSTRUCTION.

B.M.
ELEV.

NO.	REVISIONS	DATE	BY
0	ISSUED FOR TENDER	19.09.18	J.M.B.

Stantec
500 - 311 Portage Avenue, Winnipeg MB Canada
www.stantec.com

DESIGNED BY	H.M.V.	CHECKED BY	C.D.
DRAWN BY	J.M.B.	APPROVED BY	K.S.A.
HOR. SCALE: VERTICAL:	AS NOTED	RELEASED FOR CONSTRUCTION:	
DATE	2019.09.18	DATE	

ENGINEER'S SEAL

TENDER DRAWING
NOT TO BE USED FOR CONSTRUCTION

CONSULTANT DRAWING NO.
S-102

Winnipeg

THE CITY OF WINNIPEG
PUBLIC WORKS DEPARTMENT
ENGINEERING DIVISION

DUBLIN AVENUE BRIDGE REPLACEMENT
PROPOSED BRIDGE STRUCTURE
GENERAL ARRANGEMENT

SHEET 5 OF 48
CAD FILE DRAWING NUMBER 33340s-102-926.dwg
CITY DRAWING NUMBER B105-19-5

U:\13233400\300_drawing\0202_sheet_files\03_structure\33340s-102-926.dwg
2019/09/18 1:41 PM By: Hon, Jake