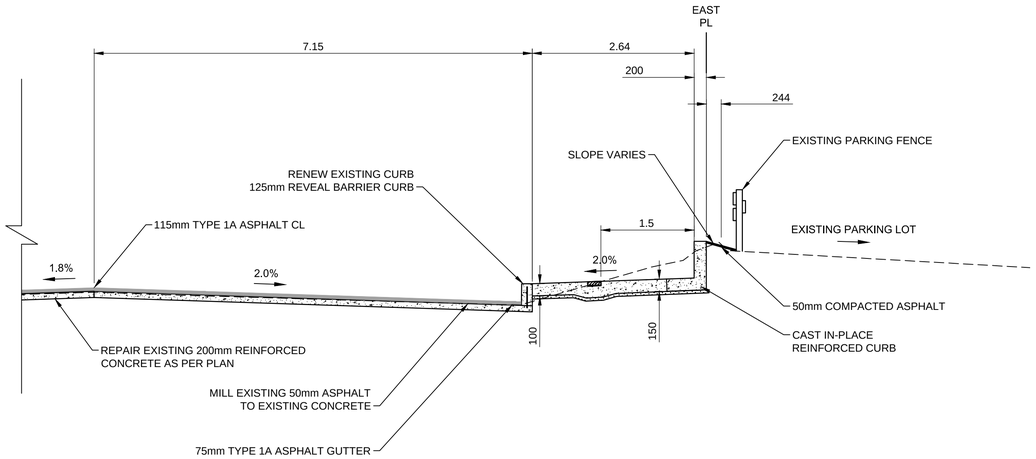

A
31 35
ST. JAMES CROSS SECTION AT STA 2+430
1:50

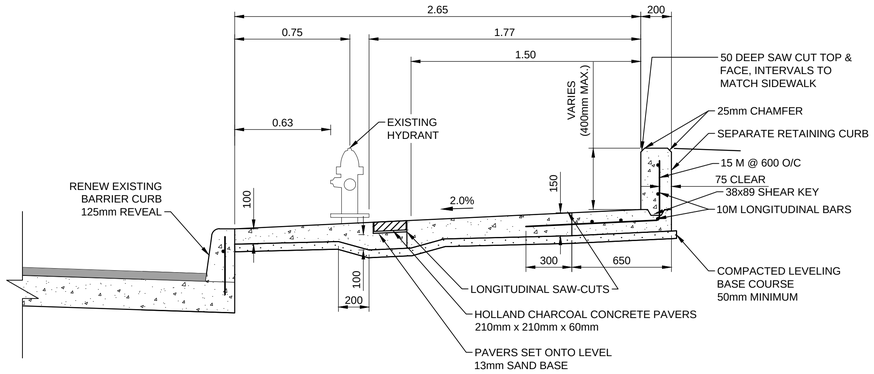

1
-
ST. JAMES STREET RETAINING CURB >200mm AND ≤400mm
1:20

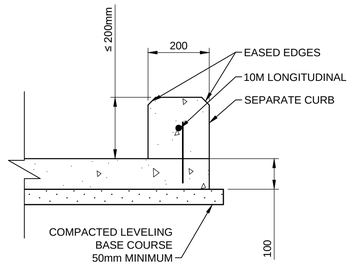

2
-
RETAINING CURB ≤200mm
1:10

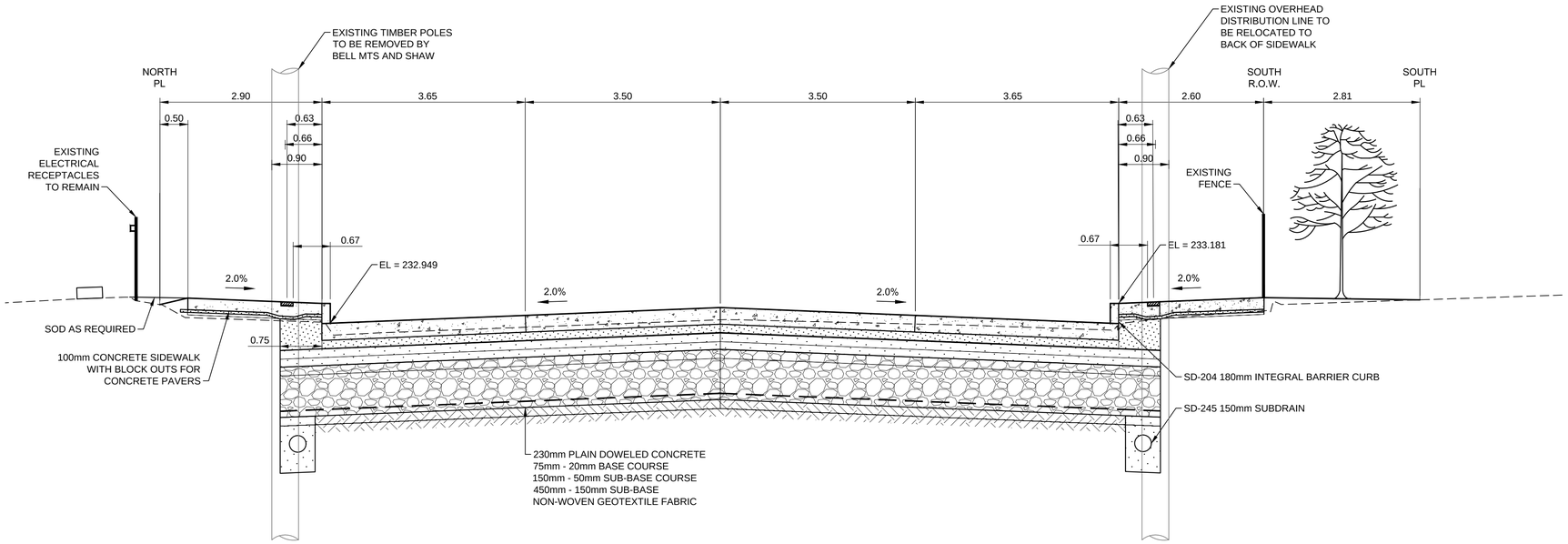

B
-
DUBLIN AVENUE TYPICAL SECTION NEAR DOMINION BRIDGE YARDS
1:20

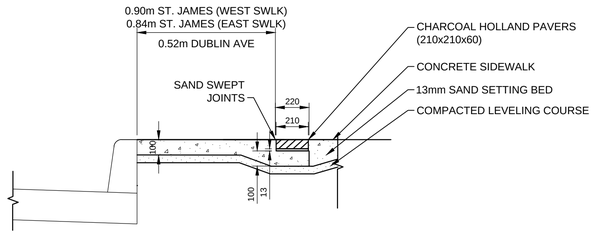

3
-
SIDEWALK PAVING BAND
1:20

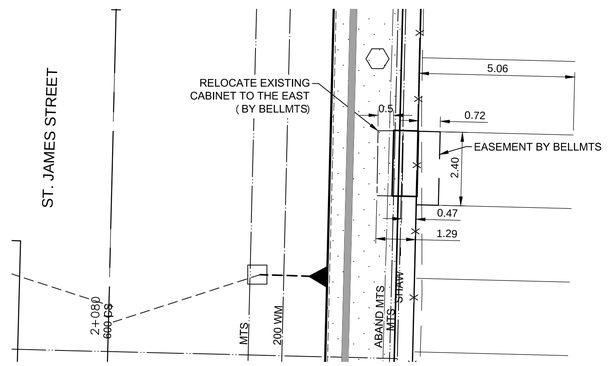

4
28 35
ST. JAMES STREET BELL MTS BOX
(WORK BY BELL MTS)
1:50

WARNING

IF POWER EQUIPMENT OR EXPLOSIVES ARE TO BE USED FOR EXCAVATION ON THIS PROJECT THE CONTRACTOR MUST:

1) NOTIFY THE GAS COMPANY OF THE PROPOSED LOCATION OF EXCAVATION.

2) TAKE PRECAUTION TO AVOID DAMAGE TO GAS COMPANY INSTALLATIONS.

SEE PROVINCIAL REGULATION 140/92 FOR DETAILS

METRIC

WHOLE NUMBERS INDICATE MILLIMETRES
DECIMALIZED NUMBERS INDICATE METRES

150 WM	WATERMAIN	150 WM		HYDRO		150 WM	WATERMAIN	150 WM
	HYDRANT			M.T.S.			HYDRANT, VALVE	
	VALVE			CONCRETE		300 LDS	LAND DRAINAGE SEWER	300 LDS
300 LDS	LAND DRAINAGE SEWER	300 LDS		ASPHALT		250 WWS	WASTE WATER SEWER	250 WWS
250 WWS	WASTE WATER SEWER	250 WWS		SIDEWALK			℄ PROFILE	
	MANHOLE			PROPERTY LINE			NORTH OR WEST GUTTER	
	CATCH BASIN			SURVEY BAR			SOUTH OR EAST GUTTER	
	CURB INLET/CATCH PIT			DITCH			NORTH OR WEST PL	
	TRANSIT STOP		(31.334)	ELEVATION	(32.231)		SOUTH OR EAST PL	
	CULVERT			SIDEWALK RAMP			NORTH OR WEST DITCH	
	GAS						SOUTH OR EAST DITCH	
EXISTING	LEGEND–PLAN	PROPOSED	EXISTING	LEGEND–PLAN	PROPOSED	EXISTING	LEGEND–PROFILE	PROPOSED

LOCATION APPROVED
UNDERGROUND STRUCTURES

SUPV. U/G STRUCTURES COMMITTEE — DATE

NOTE:
LOCATION OF UNDERGROUND STRUCTURES AS SHOWN ARE BASED ON THE BEST INFORMATION AVAILABLE BUT NO GUARANTEE IS GIVEN THAT ALL EXISTING UTILITIES ARE SHOWN OR THAT THE GIVEN LOCATIONS ARE EXACT. CONFIRMATION OF EXISTENCE AND EXACT LOCATION OF ALL SERVICES MUST BE OBTAINED FROM THE INDIVIDUAL UTILITIES BEFORE PROCEEDING WITH CONSTRUCTION.

B.M.
ELEV.

NO.	REVISIONS	DATE	BY
0	ISSUED FOR TENDER	19.09.18	J.M.B.

Stantec
500 - 311 Portage Avenue, Winnipeg MB Canada
www.stantec.com

DESIGNED BY	T.G.	CHECKED BY	S.R.S.
DRAWN BY	M.K.	APPROVED BY	
HOR. SCALE: VERTICAL:	AS NOTED	RELEASED FOR CONSTRUCTION:	
DATE	2019.09.18	DATE	

ENGINEER'S SEAL

TENDER DRAWING
NOT TO BE USED FOR CONSTRUCTION

CONSULTANT DRAWING NO.
C-501

Winnipeg
THE CITY OF WINNIPEG
PUBLIC WORKS DEPARTMENT
ENGINEERING DIVISION

DUBLIN AVENUE BRIDGE REPLACEMENT

MISCELLANEOUS SECTIONS & DETAILS

SHEET 35 OF 48

CAD FILE DRAWING NUMBER
33340c-501-926.dwg

CITY DRAWING NUMBER
P-3503-17

ENGINEERS GEOSCIENTISTS MANITOBA
Certificate of Authorization
Stantec Consulting Ltd.
No. 1301

I:\1\1373234\0300_drawing\0302_sheet_files\02_civil\33340c-501-926.dwg
2019/09/18 1:19 AM By: Kjartanson, Melanie