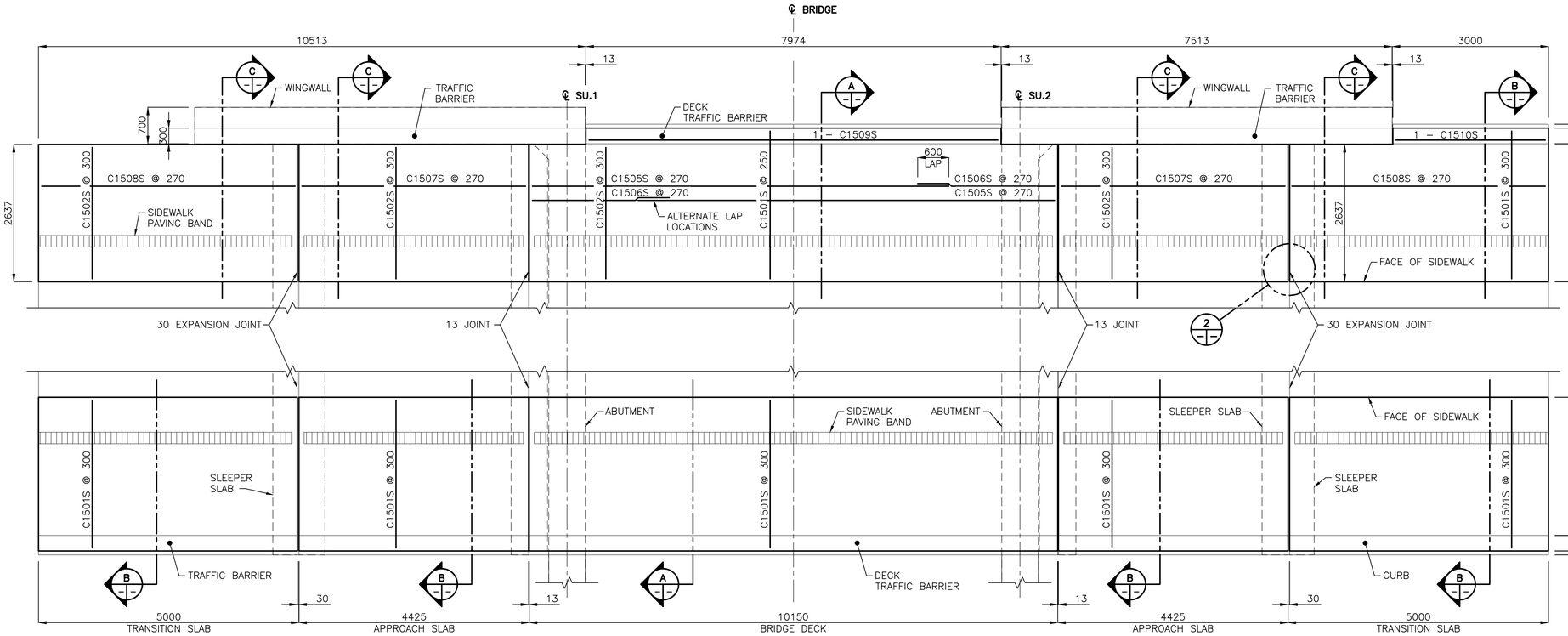

PLAN – SIDEWALKS
1:50

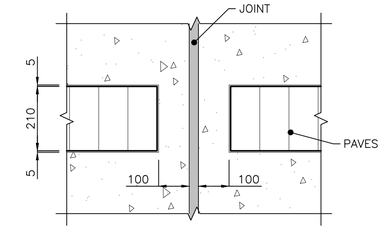

2 DETAIL – SIDEWALK PAVING BAND
1:10

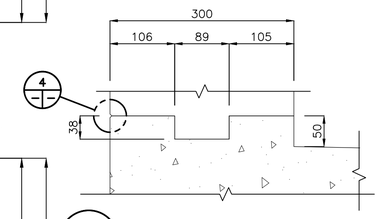

3 DETAIL – TYPICAL SHEAR KEY
1:5

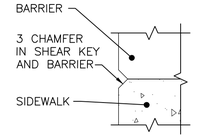

4 DETAIL
1:1

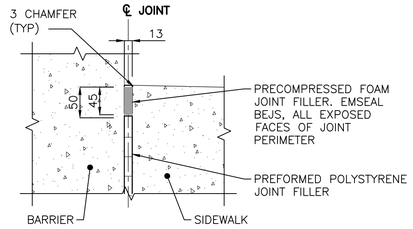

5 DETAIL – TYPICAL JOINT DETAIL
1:5

NOTES:
BONDING AGENT WITH SIKA LATEX R TO BE APPLIED TO THE FIRST 200mm ON BRIDGE DECK SURFACE PRIOR TO THE PLACEMENT OF CURB AND SIDEWALK CONCRETE PLACEMENT IN ACCORDANCE WITH CW3310 AND MANUFACTURERS PRODUCT DATA SHEET

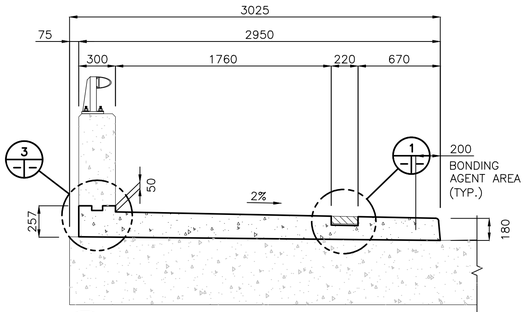

A SECTION – SIDEWALK ON BRIDGE DECK
1:25

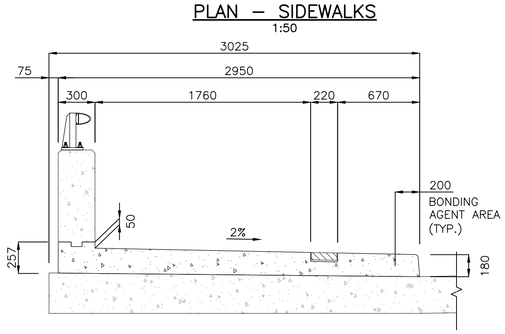

B SECTION – SIDEWALK ON APPROACH & TRANSITION SLAB
1:25

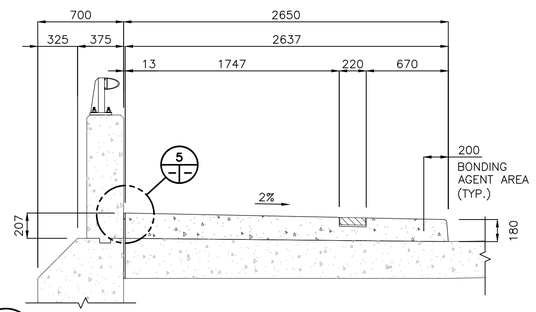

C SECTION – SIDEWALK ON APPROACH & TRANSITION SLAB
1:25

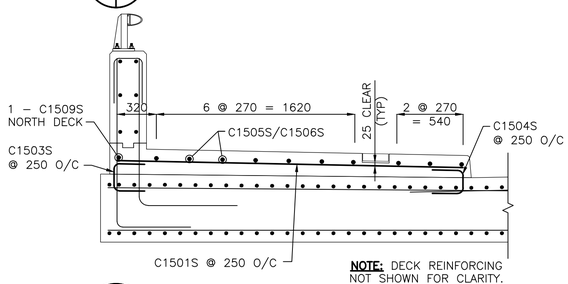

A SECTION – SIDEWALK REINFORCEMENT
1:25

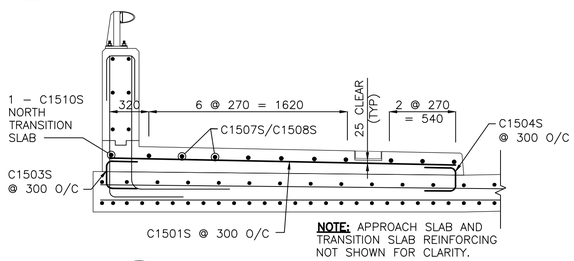

B SECTION – SIDEWALK REINFORCEMENT
1:25

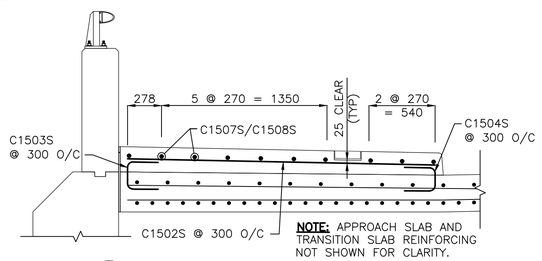

C SECTION – SIDEWALK REINFORCEMENT
1:25

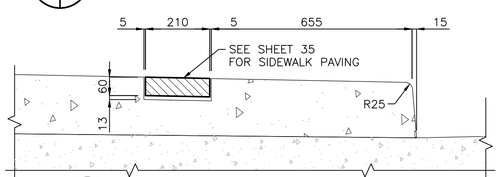

1 DETAIL – SIDEWALK PAVING BAND
1:10

BILL OF REINFORCING STEEL

TOTAL SIDEWALKS

STRAIGHT BARS				BENT BARS										
MARK	QTY.	LENGTH (mm)	MASS (kg)	MARK	QTY.	TYPE	A	B	C	D	E	F	LENGTH (mm)	MASS (kg)
C1501S	146	2825	647.5	C1503S	210	A	250	185	250				685	225.8
C1502S	64	2510	252.2	C1504S	210	B	250	155	250				655	216.0
C1505S	21	8000	263.8											
C1506S	21	2630	86.7											
C1507S	42	4292	283.0											
C1508S	42	4867	320.9											
C1509S	1	7854	12.3											
C1510S	1	2867	4.5											

TOTAL MASS OF STAINLESS STEEL REINFORCING FOR TWO (2) SIDEWALKS = 2,312.7 kg

BAR TYPES

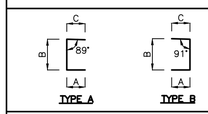

NOTE:
1. ALL DIMENSIONS GIVEN IN BENDING DIAGRAM ARE OUT TO OUT, EXCEPT RADII WHICH ARE INSIDE DIMENSIONS. ALL REINFORCING STEEL BENDS AND HOOKS SHALL CONFORM TO CLAUSE 6.6.2 OF C.S.A. A23.1–19, UNLESS NOTED OTHERWISE IN THE BILL OF REINFORCING STEEL.
2. ALL REINFORCING STEEL SHALL BE DEFORMED STEEL, UNLESS NOTED OTHERWISE IN THE BILL OF REINFORCING STEEL.
3. ALL STAINLESS STEEL REINFORCING SHALL CONFORM TO ASTM A955M, 300 SERIES MINIMUM GRADE 420.
4. LIKE BARS SHALL BE BUNDLED, SECURELY TIED AND IDENTIFIED AS TO MARK AND SITE NO. BY APPROPRIATE MEANS. ALL OTHER ITEMS TO BE IDENTIFIED IN A SIMILAR FASHION.
5. UNLESS OTHERWISE NOTED, PIN DIAMETERS SHALL BE SIMILAR AT ALL BENDS AND HOOKS OF A BAR IN ACCORDANCE WITH THE FOLLOWING DETAIL:

APEGM
Certificate of Authorization
Stantec Consulting Ltd.
No. 1301

METRIC
WHOLE NUMBERS INDICATE MILLIMETRES
DECIMALIZED NUMBERS INDICATE METRES

LOCATION APPROVED
UNDERGROUND STRUCTURES

SUPV. U/G STRUCTURES COMMITTEE — DATE

NOTE:
LOCATION OF UNDERGROUND STRUCTURES AS SHOWN ARE BASED ON THE BEST INFORMATION AVAILABLE BUT NO GUARANTEE IS GIVEN THAT ALL EXISTING UTILITIES ARE SHOWN OR THAT THE GIVEN LOCATIONS ARE EXACT. CONFIRMATION OF EXISTENCE AND EXACT LOCATION OF ALL SERVICES MUST BE OBTAINED FROM THE INDIVIDUAL UTILITIES BEFORE PROCEEDING WITH CONSTRUCTION.

B.M.
ELEV.

NO.	REVISIONS	DATE	BY
0	ISSUED FOR TENDER	19.09.18	J.M.B.

Stantec
500 - 311 Portage Avenue, Winnipeg MB Canada
www.stantec.com

DESIGNED BY	H.M.V.	CHECKED BY	C.D.
DRAWN BY	J.M.B.	APPROVED BY	K.S.A.
HOR. SCALE: / VERTICAL:	1:50 OR AS NOTED	RELEASED FOR CONSTRUCTION:	
DATE	2019.09.18	DATE	

ENGINEER'S SEAL

TENDER DRAWING
NOT TO BE USED FOR CONSTRUCTION

CONSULTANT DRAWING NO.
S-113

Winnipeg
THE CITY OF WINNIPEG
PUBLIC WORKS DEPARTMENT
ENGINEERING DIVISION

DUBLIN AVENUE BRIDGE REPLACEMENT
PROPOSED BRIDGE STRUCTURE
SIDEWALKS DETAILS

SHEET 16 OF 48
CAD FILE DRAWING NUMBER 33340s-113-926.dwg
CITY DRAWING NUMBER B105-19-16

U:\113233400\300_drawings\0202_sheet_files\03_structure\33340s-113-926.dwg
2019/09/18 2:13 PM By: Hien, Jolie