ISO A1 - 594mm x 841mm

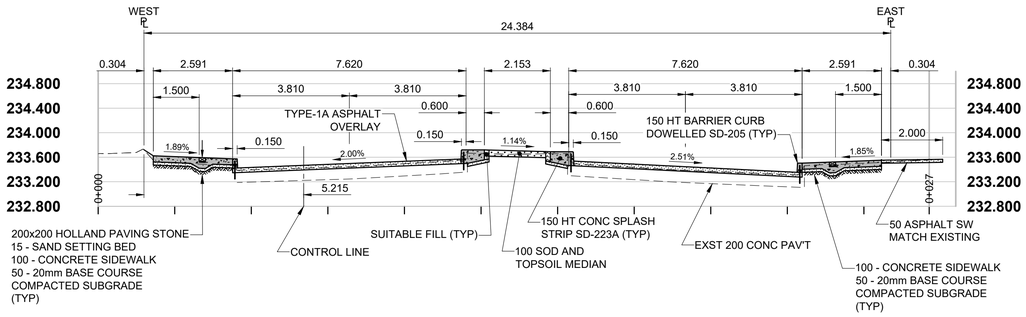

A — SECTION 'A' STA 0+120.000

6 | 14

0 SCALE: 1:100 H 5.0m
0 SCALE 1:50 V 2.5m

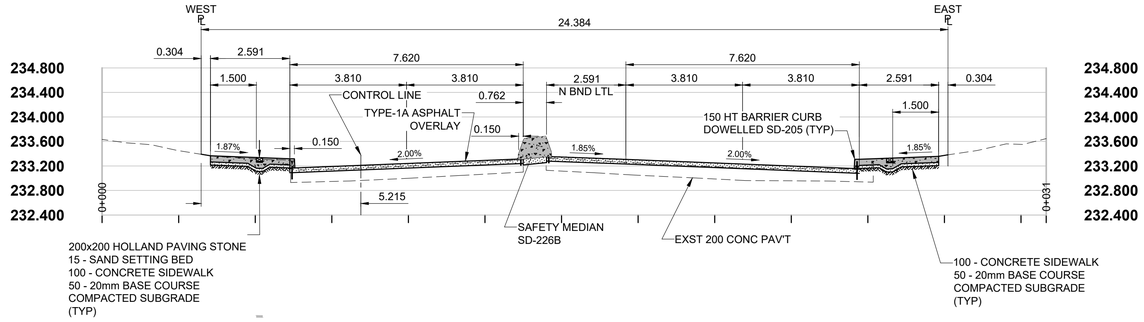

B — SECTION 'B' STA 0+290.000

8 | 14

0 SCALE: 1:100 H 5.0m
0 SCALE 1:50 V 2.5m

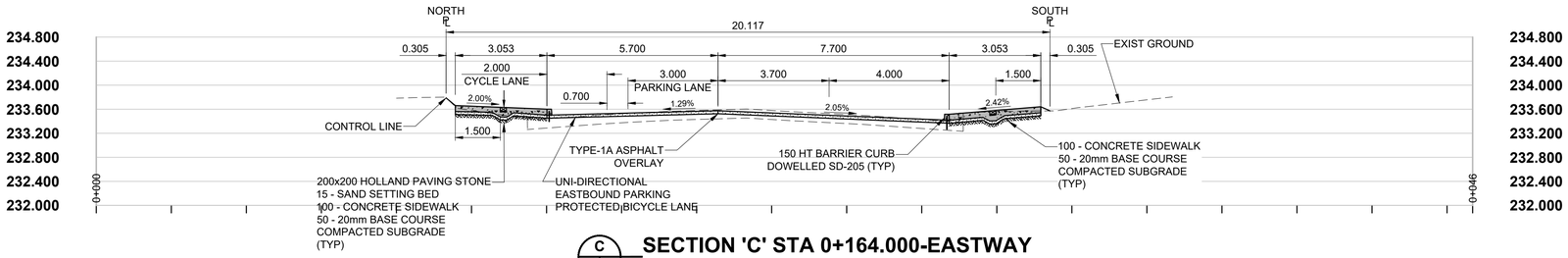

C — SECTION 'C' STA 0+164.000-EASTWAY

11 | 14

0 SCALE: 1:100 H 5.0m
0 SCALE 1:50 V 2.5m

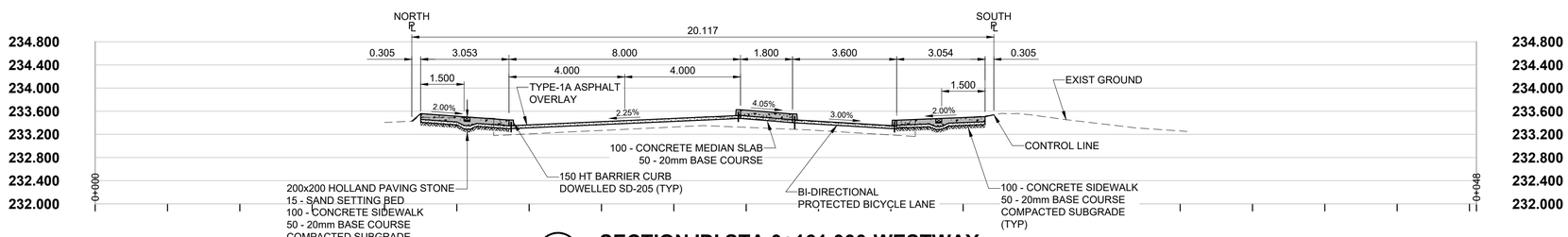

D — SECTION 'D' STA 0+161.000-WESTWAY

13 | 14

0 SCALE: 1:100 H 5.0m
0 SCALE 1:50 V 2.5m

SECTION LEGEND

Section Taken Shown

ENGINEERS GEOSCIENTISTS MANITOBA
Certificate of Authorization
MORRISON HERSHFIELD
No. 1736

BID OPPORTUNITY No. 38-2018

METRIC

WHOLE NUMBERS INDICATE MILLIMETRES
DECIMALIZED NUMBERS INDICATE METRES

EXISTING	LEGEND - PLAN	NEW	EXISTING	LEGEND - PLAN	NEW	EXISTING	LEGEND - PLAN	NEW
	GAS			MANHOLE			CONCRETE PAVEMENT	
	MTS / PEDESTAL			CATCH BASIN / CATCH PIT			CONC SIDEWALK / MEDIAN	
	HYDRO / CABINET			CURB INLET WITH BOX			ASPHALT PAVEMENT	
	CATV / FIBRE OPTIC			TREE			PAVING STONE	
	TRAFFIC SIGNALS / PIT			TH-12 TEST HOLE			GRAVEL	
	LAND DRAINAGE SEWER			PROPERTY LINE			RAMP CURB	
	SANITARY/COMBINED SEWER			SURVEY BAR			PLANING / REMOVAL	
	CB LEAD / SSP / DCP			FENCE				
	WATER MAIN			BOC / EDGE OF PAVEMENT				
	SUBDRAIN		33.000	ELEVATION	33.333			
	DITCH			TRAFFIC SIGN				

LOCATION APPROVED
UNDERGROUND STRUCTURES

SUPR, U/G STRUCTURES COMMITTEE — DATE

NOTE:
LOCATION OF UNDERGROUND STRUCTURES AS SHOWN ARE BASED ON THE BEST INFORMATION AVAILABLE BUT NO GUARANTEE IS GIVEN THAT ALL EXISTING UTILITIES ARE SHOWN OR THAT THE GIVEN LOCATIONS ARE EXACT. CONFIRMATION OF EXISTENCE AND EXACT LOCATION OF ALL SERVICES MUST BE OBTAINED FROM THE INDIVIDUAL UTILITIES BEFORE PROCEEDING WITH CONSTRUCTION.

BM -
ELEV -

No.	REVISIONS	YY/MM/DD	BY
B	ISSUED FOR TENDER	18/03/09	RPB
A	ISSUED FOR CLIENT REVIEW	18/01/31	RPB

MORRISON HERSHFIELD

DESIGNED BY	WRJ	CHECKED BY	RPB
DRAWN BY	DID	APPROVED BY	BWB
HOR SCALE	1:100	RELEASED FOR CONSTRUCTION	
VERT SCALE	1:50		
DATE	18/03/09	DATE	

PROFESSIONAL'S SEAL
PROVINCE OF MANITOBA
R.P. BRUCE
REGISTERED PROFESSIONAL ENGINEER

CONSULTANT FILE NAME
W160034-14-Empress-Rehab-XS-14.dwg

Winnipeg

THE CITY OF WINNIPEG
PUBLIC WORKS DEPARTMENT
ENGINEERING DIVISION

2018 REGIONAL STREET REHABILITATION
EMPRESS STREET
PORTAGE AVENUE TO JACK BLICK AVENUE;
WESTWAY AND EASTWAY

CROSS SECTIONS 'A', 'B', 'C' AND 'D'

CITY DRAWING NUMBER: P-3494-14
SHEET 14 OF 14
DRAWING No. 14 REV B

O:\Winnipeg\Proj\W160034\4 Design\1 Drawings\06 Sheets\Detailed Design\Contract 1-Rehabilitation\W160034-14-Empress-Rehab-XS-14.dwg Last Saved: 3/5/2018 2:21 PM by DDoszpod Plotted: 3/5/2018 2:24 PM by Daniel Doszpod