BILL OF REINFORCING – BLACK STEEL BARS

	MARK	NO. BARS	SIZE	LENGTH	TYPE	A	B	C	D	E	F	G	H	J	K	O	R	TOTAL (m)	MASS (kg)
ABUTMENTS	A1501	20	15	12000	STR													240.00	376.80
	A1502	20	15	3190	STR													63.80	100.17
	A1503	16	15	2300	17		600	1100	600									36.80	57.78
	A1504	72	15	3630	T2	250	600	965	600	965		250						261.36	410.34
	A2001	84	20	3150	17		1070	1010	1070									264.60	623.13
	A2002	4	20	1820	17		950	870										7.28	17.14
	A2003	12	20	12000	17		800	11200										144.00	339.12
	A2004	12	20	4945	17		800	4145										59.34	139.75
	A2005	46	20	12000	STR													552.00	1299.96
	A2006	46	20	3380	STR													155.48	366.16
	A2007	44	20	1725	34		300	1125	300				1053		383			75.90	178.74
	A2008	4	20	1260	34		300	660	300				622		210			5.04	11.87
	A2009	102	20	3725	17		2280	645	800									379.95	894.78
	A2010	104	20	2625	17		1945	680										273.00	642.92
	A2011	2	20	3795	17		2310	685	800									7.59	17.87
	A2012	208	20	1600	STR													332.80	783.74
	A2013	28	20	2500	2	490	2010											70.00	164.85
	A2501	14	25	8000	19		3000	5000					120		3001	8001		112.00	439.60
	A2502	2	25	5625	17		3450	2175										11.25	44.16
	A2503	2	25	3625	17		1450	2175										7.25	28.46
	A2504	4	25	3870	17		1450	2420										15.48	60.76
	A2505	6	25	5870	17		3450	2420										35.22	138.24
	A2506	2	25	9675	17		7500	2175										19.35	75.95
	A2507	2	25	7675	17		5500	2175										15.35	60.25
	A2508	6	25	7810	17		5500	2310										46.86	183.93
	A2509	4	25	9810	17		7500	2310										39.24	154.02
	A2510	28	25	3675	3		400	2875	400				230			3526		102.90	403.88
	A2511	28	25	2870	3		390	2090	390				318			2534		80.36	315.41
	A2512	4	25	2635	19		1200	1435					380		1140			10.54	41.37
	A3001	4	30	2635	19		1200	1435					380		1140			10.54	57.92
	A3002	4	30	2140	2	490	1650											8.56	47.04
	A3003	4	30	2440	2	490	1950											9.76	53.63
	A3004	4	30	2740	2	490	2250											10.96	60.23
	A3005	4	30	3040	2	490	2550											12.16	66.82
	A3006	4	30	3335	2	490	2845											13.34	73.30
	A3007	4	30	3730	2	490	3240											14.92	81.99
	A3008	4	30	4035	2	490	3545											16.14	88.69
	A3009	4	30	4340	2	490	3850											17.36	95.39
	A3010	4	30	4645	2	490	4155											18.58	102.10
	A3011	24	30	4750	2	490	4260											114.00	626.43
WEST ABUTMENT SOUTH WINGWALL	W1501	20	15	800	17		250	300	250									16.00	25.12
	W1502	2	15	1310	17		505	300	505									2.62	4.11
	W1503	2	15	1110	17		405	300	405									2.22	3.49
	W1504	2	15	910	17		305	300	305									1.82	2.86
	W1505	2	15	780	17		240	300	240									1.56	2.45
	W1506	2	15	600	STR													1.20	1.88
	W1507	2	15	695	STR													1.39	2.18
	W1508	2	15	795	STR													1.59	2.50
	W1509	2	15	890	STR													1.78	2.79
	W1510	2	15	990	STR													1.98	3.11
	W1511	2	15	1090	STR													2.18	3.42
	W1512	2	15	1185	STR													2.37	3.72
	W1513	2	15	1285	STR													2.57	4.03
	W1514	2	15	1385	STR													2.77	4.35
	W1515	2	15	1480	STR													2.96	4.65
	W1516	2	15	1580	STR													3.16	4.96
	W1517	2	15	1680	STR													3.36	5.28
	W1518	2	15	1780	STR													3.56	5.59
	W1519	2	15	1875	STR													3.75	5.89
	W1520	2	15	1975	STR													3.95	6.20
	W1521	2	15	2075	STR													4.15	6.52
	W1522	2	15	2170	STR													4.34	6.81
	W1523	2	15	2270	STR													4.54	7.13
	W1524	2	15	2370	STR													4.74	7.44
	W1525	2	15	2470	STR													4.94	7.76

BILL OF REINFORCING – BLACK STEEL BARS (CONTINUED)

	MARK	NO. BARS	SIZE	LENGTH	TYPE	A	B	C	D	E	F	G	H	J	K	O	R	TOTAL (m)	MASS (kg)
WEST ABUTMENT SOUTH WINGWALL CONTINUED	W2001	1	20	1525	STR													1.53	3.59
	W2002	1	20	2135	STR													2.14	5.03
	W2003	1	20	2745	STR													2.75	6.46
	W2004	1	20	3360	STR													3.36	7.91
	W2005	1	20	3965	STR													3.97	9.34
	W2006	1	20	4580	STR													4.58	10.79
	W2007	1	20	5185	STR													5.19	12.21
	W2008	1	20	5795	STR													5.80	13.65
	W2009	1	20	6410	STR													6.41	15.10
	W2010	2	20	6840	STR													13.68	32.22
	W2011	3	20	1470	2	300	1170											4.41	10.39
	W2501	1	25	1490	STR													1.49	5.85
	W2502	1	25	2100	STR													2.10	8.24
	W2503	1	25	2710	STR													2.71	10.64
	W2504	1	25	3320	STR													3.32	13.03
	W2505	1	25	3930	STR													3.93	15.43
	W2506	1	25	4540	STR													4.54	17.82
	W2507	1	25	4990	STR													4.99	19.59
	W2508	1	25	6840	STR													6.84	26.85
	W3001	6	30	3940	2	490	3450											23.64	129.90
WEST ABUTMENT NORTH WINGWALL	W1531	24	15	800	17		250	300	250									19.20	30.14
	W1532	2	15	2925	STR													5.85	9.18
	W1533	2	15	2850	STR													5.70	8.95
	W1534	2	15	2750	STR													5.50	8.64
	W1535	2	15	2655	STR													5.31	8.34
	W1536	2	15	2560	STR													5.12	8.04
	W1537	2	15	2460	STR													4.92	7.72
	W1538	2	15	2365	STR													4.73	7.43
	W1539	2	15	2270	STR													4.54	7.13
	W1540	2	15	2175	STR													4.35	6.83
	W1541	2	15	2075	STR													4.15	6.52
	W1542	2	15	1980	STR													3.96	6.22
	W1543	2	15	1885	STR													3.77	5.92
	W1544	2	15	1785	STR													3.57	5.60
	W1545	2	15	1690	STR													3.38	5.31
	W1546	2	15	1595	STR													3.19	5.01
	W1547	2	15	1500	STR													3.00	4.71
	W1548	2	15	1400	STR													2.80	4.40
	W1549	2	15	1305	STR													2.61	4.10
	W1550	2	15	1210	STR													2.42	3.80
	W1551	2	15	1115	STR													2.23	3.50
	W1552	2	15	1015	STR													2.03	3.19
	W1553	2	15	920	STR													1.84	2.89
	W1554	2	15	825	STR													1.65	2.59
	W1555	2	15	760	STR													1.52	2.39
	W2021	1	20	1525	STR													1.53	3.59
	W2022	1	20	2135	STR													2.14	5.03
	W2023	1	20	2745	STR													2.75	6.46
	W2024	1	20	3360	STR													3.36	7.91
	W2025	1	20	3965	STR													3.97	9.34
	W2026	1	20	4580	STR													4.58	10.79
	W2027	1	20	5185	STR													5.19	12.21
	W2028	1	20	5795	STR													5.80	13.65
	W2029	1	20	6410	STR													6.41	15.10
	W2030	4	20	6840	STR													27.36	64.43
	W2031	5	20	1470	2	300	1170											7.35	17.31
	W2521	1	25	1490	STR													1.49	5.85
	W2522	1	25	2100	STR													2.10	8.24
	W2523	1	25	2710	STR													2.71	10.64
	W2524	1	25	3320	STR													3.32	13.03
	W2525	1	25	3930	STR													3.93	15.43
	W2526	1	25	4540	STR													4.54	17.82
	W2527	1	25	4990	STR													4.99	19.59
	W2528	4	25	5040	STR													20.16	79.13
	W3002	11	30	3940	2	490	3540											43.34	238.15

BENDING DIAGRAMS:

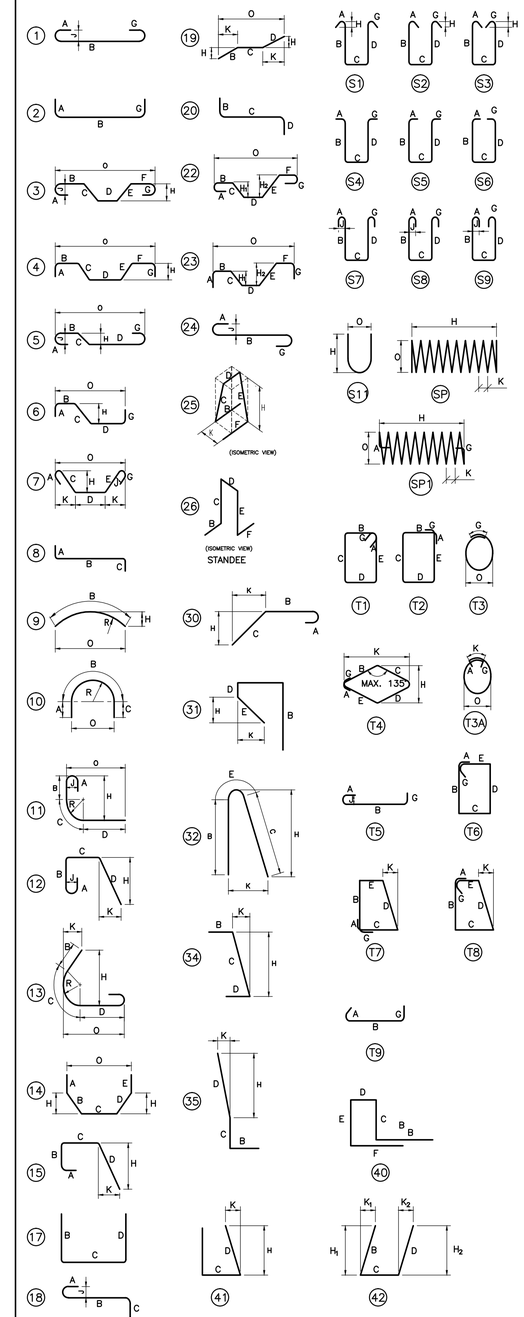

NOTES:

1. ALL DIMENSIONS ARE OUT-TO-OUT OF A BAR EXCEPT "A" AND "G" ON STANDARD 180° AND 135° HOOKS
2. "J" DIMENSION ON 180° HOOKS TO BE SHOWN ONLY WHERE NECESSARY TO RESTRICT HOOK SIZE. OTHERWISE STANDARD HOOKS TO BE USED.
3. ON TRUSS BARS "J" WILL BE KEPT EQUAL TO OR LESS THAN "H" . WHERE "J" CAN EXCEED "H" IT SHOULD BE SHOWN.
4. ON STIRRUPS "H" DIMENSION SHOULD BE SHOWN ONLY WHERE NECESSARY TO FIT WITHIN CONCRETE.
5. CRITICAL DIMENSIONS ARE TO BE WHERE BARS ARE TO BE BENT MORE ACCURATELY THAN STANDARD BENDING TOLERANCE.
6. ON TYPE T3 "G" IS EQUAL TO CLASS B SPLICE.
7. FIGURES SHOWN IN CIRCLES SHOW TYPES.
8. ALL BAR BENDS OTHER THAN THE TYPES SHOWN MUST BE DESIGNATED AS TYPE "X".
9. STAINLESS STEEL REINFORCING SHALL BE FABRICATED IN ACCORDANCE WITH THE LATEST EDITION OF THE REINFORCEMENT STEEL MANUAL OF STANDARD PRACTICE BY THE REINFORCING STEEL INSTITUTE OF CANADA (RSIC), TO THE LENGTHS AND SHAPES AS SHOWN ON THE DRAWINGS.

UNLESS OTHERWISE NOTED DIAMETER "D" IS THE SAME ALL HOOKS AND BENDS ON A BAR. WHERE SLOPE DIFFERS FROM 45° DIMENSIONS "H" AND "K" MUST BE SHOWN

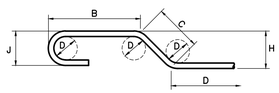

ENLARGED VIEW BAR BENDING DETAILS

ENGINEERS GEOSCIENTISTS MANITOBA
Certificate of Authorization
Tetra Tech Canada Inc.
No. 6499

B.M.
ELEV.

NO.	REVISIONS	DATE	BY
0	ISSUED FOR TENDER	17.10.04	D.M.

TETRA TECH

DESIGNED BY D.M. | CHECKED BY J.Z.
DRAWN BY B.M. | APPROVED BY E.F.S.
HOR. SCALE: AS NOTED
VERTICAL:
DATE 17.10.04
ACCEPTED BY DATE
ORIGINAL DRAWING 17.10.04
SIGNED BY: D. MUHURDAREVIC, P.ENG.
D. MUHURDAREVIC P.ENG.
BRIDGE PROJECTS ENGINEER

PROVINCE OF MANITOBA
D.E.S. MITCHELL
ORIGINAL SIGNED 17.10.04
33352
REGISTERED PROFESSIONAL ENGINEER

CONSULTANT DRAWING NO.
1600070700-DWG-S0045

Winnipeg
THE CITY OF WINNIPEG
PUBLIC WORKS DEPARTMENT
ENGINEERING DIVISION

SASKATCHEWAN AVE AT STURGEON CREEK
BRIDGE CONSTRUCTION

REINFORCING SCHEDULE SHEET 1 OF 3

CITY DRAWING NUMBER B248-17-045
SHEET 45 OF 69