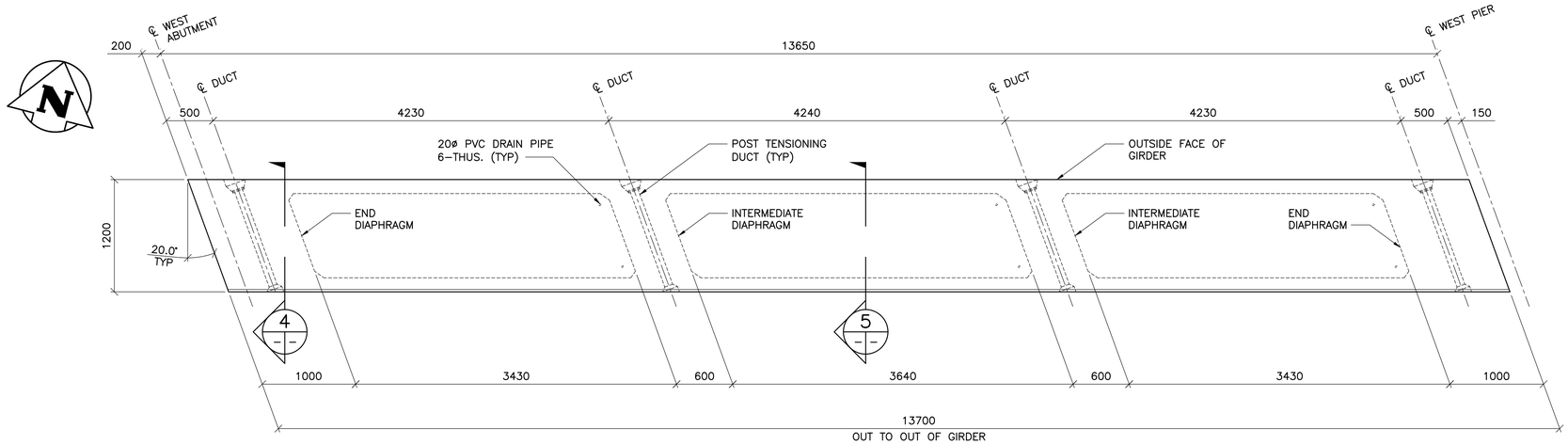

1 EXTERIOR GIRDERS – Mk. G1 AND G1A
1 : 30
– GIRDERS Mk. G1 AS SHOWN, GIRDERS Mk. G1A SIMILAR

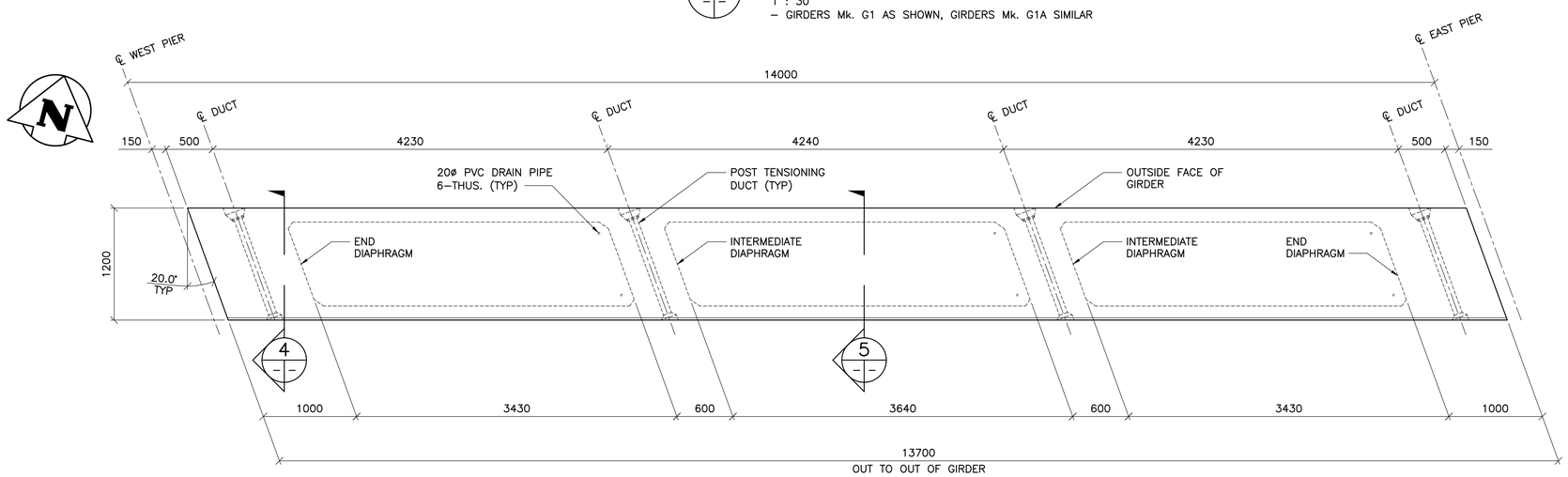

2 EXTERIOR GIRDERS – Mk. G3 AND G3A
1 : 30
– GIRDERS Mk. G3 AS SHOWN, GIRDERS Mk. G3A SIMILAR

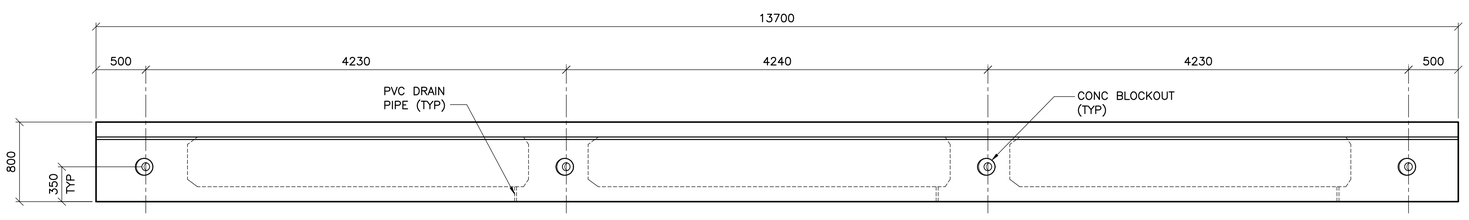

3 GIRDER ELEVATION
1 : 30

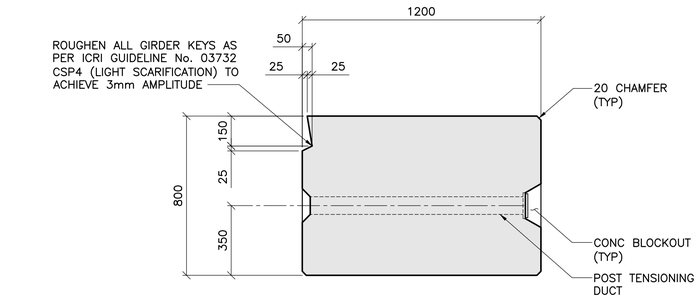

4 SECTION @ DIAPHRAGM
1 : 15

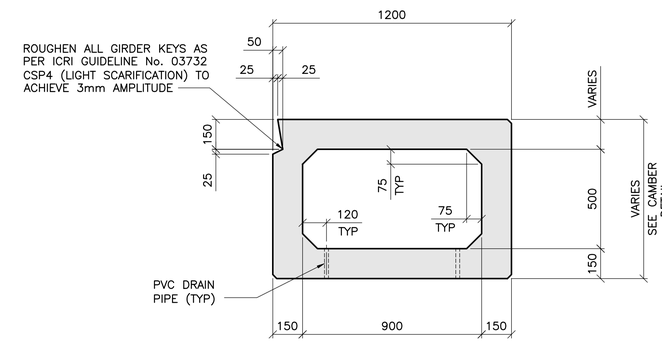

5 SECTION
1 : 15

NO.	REVISIONS	DATE	BY
	B.M. ELEV.		
0	ISSUED FOR TENDER	17.10.04	D.M.

ENGINEERS GEOSCIENTISTS MANITOBA
Certificate of Authorization
Tetra Tech Canada Inc.
No. 6499

TETRA TECH

DESIGNED BY	D.M.	CHECKED BY	J.Z.
DRAWN BY	G.I. / B.M.	APPROVED BY	E.F.S.
HOR. SCALE: VERTICAL:	AS NOTED	ACCEPTED BY / DATE	ORIGINAL DRAWING SIGNED BY: D. MUHURDAREVIC, P.ENG. 17.10.04
DATE	17.10.04		D. MUHURDAREVIC P.ENG. BRIDGE PROJECTS ENGINEER

PROVINCE OF MANITOBA
D.E.S. MITCHELL
ORIGINAL SIGNED 17.10.04
33352
REGISTERED PROFESSIONAL ENGINEER

CONSULTANT DRAWING NO.
1600070700-DWG-S0029

Winnipeg
THE CITY OF WINNIPEG
PUBLIC WORKS DEPARTMENT
ENGINEERING DIVISION

SASKATCHEWAN AVE AT STURGEON CREEK
BRIDGE CONSTRUCTION

CITY DRAWING NUMBER B248-17-029
SHEET 29 OF 69

PRECAST PRESTRESSED BOX GIRDER
GIRDERS Mk. G1, G1A, G3 AND G3A
CONCRETE DETAILS

29