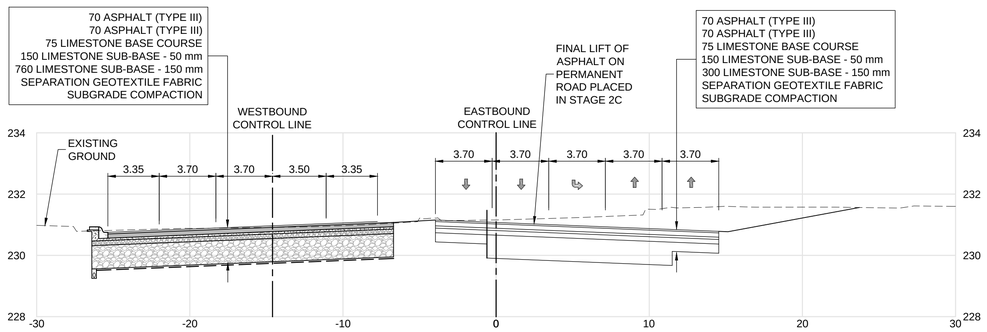

A DETOUR - STA: 4+380 (LOOKING EAST)
SCALE: HORZ. 1:100 VERT. 1:50

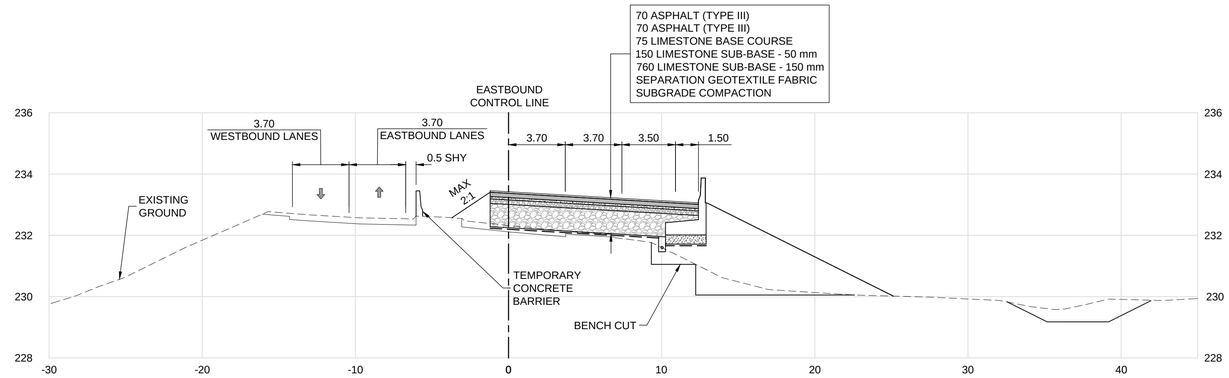

B DETOUR - STA: 4+740 (LOOKING EAST)
SCALE: HORZ. 1:100 VERT. 1:50

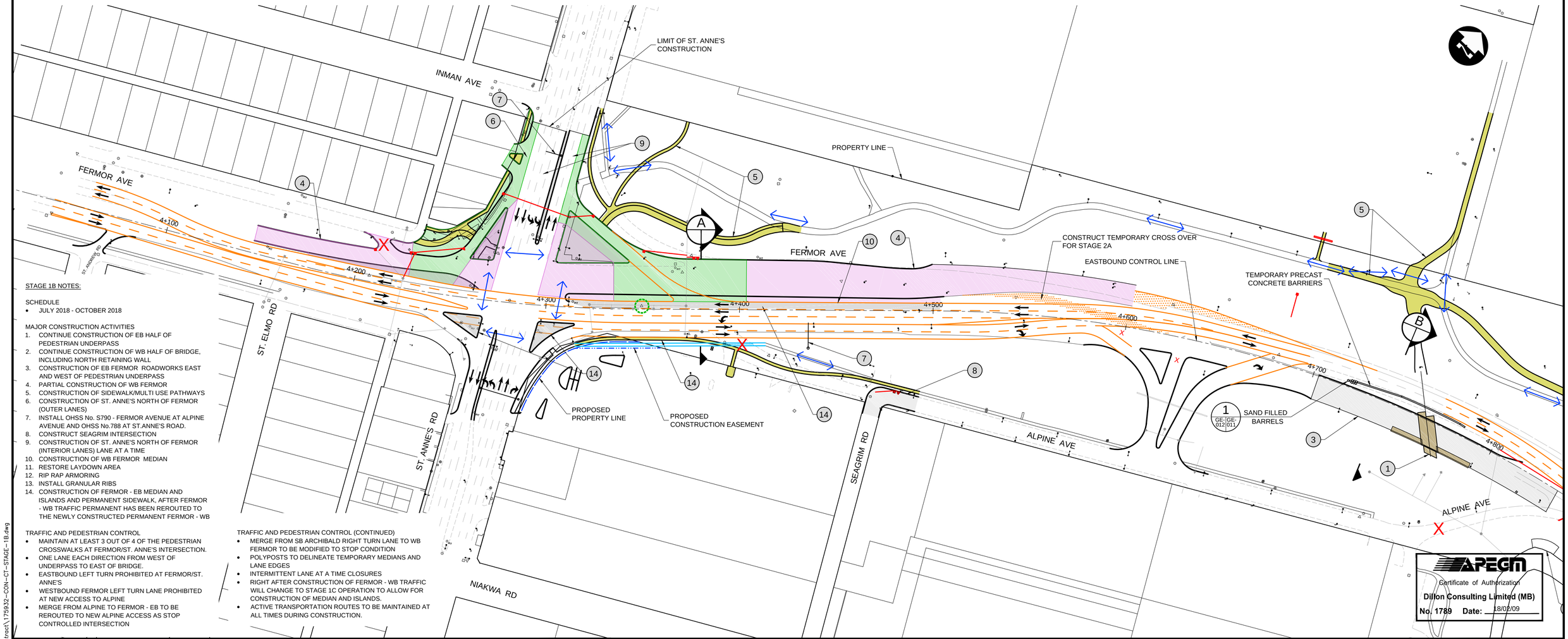

STAGE 1B NOTES:

SCHEDULE
- JULY 2018 - OCTOBER 2018

MAJOR CONSTRUCTION ACTIVITIES
1. CONTINUE CONSTRUCTION OF EB HALF OF PEDESTRIAN UNDERPASS
2. CONTINUE CONSTRUCTION OF WB HALF OF BRIDGE, INCLUDING NORTH RETAINING WALL
3. CONSTRUCTION OF EB FERMOR ROADWORKS EAST AND WEST OF PEDESTRIAN UNDERPASS
4. PARTIAL CONSTRUCTION OF WB FERMOR
5. CONSTRUCTION OF SIDEWALK/MULTI USE PATHWAYS
6. CONSTRUCTION OF ST. ANNE'S NORTH OF FERMOR (OUTER LANES)
7. INSTALL OHSS No. S790 - FERMOR AVENUE AT ALPINE AVENUE AND OHSS No.788 AT ST.ANNE'S ROAD.
8. CONSTRUCT SEAGRIM INTERSECTION
9. CONSTRUCTION OF ST. ANNE'S NORTH OF FERMOR (INTERIOR LANES) LANE AT A TIME
10. CONSTRUCTION OF WB FERMOR MEDIAN
11. RESTORE LAYDOWN AREA
12. RIP RAP ARMORING
13. INSTALL GRANULAR RIBS
14. CONSTRUCTION OF FERMOR - EB MEDIAN AND ISLANDS AND PERMANENT SIDEWALK, AFTER FERMOR - WB TRAFFIC PERMANENT HAS BEEN REROUTED TO THE NEWLY CONSTRUCTED PERMANENT FERMOR - WB

TRAFFIC AND PEDESTRIAN CONTROL
- MAINTAIN AT LEAST 3 OUT OF 4 OF THE PEDESTRIAN CROSSWALKS AT FERMOR/ST. ANNE'S INTERSECTION.
- ONE LANE EACH DIRECTION FROM WEST OF UNDERPASS TO EAST OF BRIDGE.
- EASTBOUND LEFT TURN PROHIBITED AT FERMOR/ST. ANNE'S
- WESTBOUND FERMOR LEFT TURN LANE PROHIBITED AT NEW ACCESS TO ALPINE
- MERGE FROM ALPINE TO FERMOR - EB TO BE REROUTED TO NEW ALPINE ACCESS AS STOP CONTROLLED INTERSECTION

TRAFFIC AND PEDESTRIAN CONTROL (CONTINUED)
- MERGE FROM SB ARCHIBALD RIGHT TURN LANE TO WB FERMOR TO BE MODIFIED TO STOP CONDITION
- POLYPOSTS TO DELINEATE TEMPORARY MEDIANS AND LANE EDGES
- INTERMITTENT LANE AT A TIME CLOSURES
- RIGHT AFTER CONSTRUCTION OF FERMOR - WB TRAFFIC WILL CHANGE TO STAGE 1C OPERATION TO ALLOW FOR CONSTRUCTION OF MEDIAN AND ISLANDS.
- ACTIVE TRANSPORTATION ROUTES TO BE MAINTAINED AT ALL TIMES DURING CONSTRUCTION.

APEGM
Certificate of Authorization
Dillon Consulting Limited (MB)
No. 1789 Date: 18/02/09

LEGEND - CONSTRUCTION STAGING

- MAJOR UNDERGROUNDS CONSTRUCTION
- EXISTING PROPERTY LINE
- PROPOSED PROPERTY CONSTRUCTION
- REMOVAL
- ADJUSTMENT
- TEMPORARY ROADWAY CONSTRUCTION
- TEMPORARY MEDIAN CONSTRUCTION
- PERMANENT ROADWAY CONSTRUCTION
- PERMANENT MEDIAN CONSTRUCTION
- TEMPORARY SIDEWALK/MUP CONSTRUCTION
- PERMANENT SIDEWALK/MUP CONSTRUCTION
- BRIDGE/UNDERPASS CONSTRUCTION
- STAGE 1B-1 ROADWAY CONSTRUCTION
- STAGE 1B-2 ROADWAY CONSTRUCTION
- VEHICULAR TRAFFIC
- PEDESTRIAN/CYCLIST TRAFFIC
- LANE CLOSED
- SIDEWALK CLOSED

UNDERGROUND STRUCTURES

SUPV. U/G STRUCTURES DATE

LOCATION OF UNDERGROUND STRUCTURES AS SHOWN ARE BASED ON THE BEST INFORMATION AVAILABLE, BUT NO GUARANTEE IS GIVEN THAT ALL EXISTING UTILITIES ARE SHOWN OR THAT THE GIVEN LOCATIONS ARE EXACT. CONFIRMATION OF EXISTENCE AND EXACT LOCATION OF ALL SERVICES, MUST BE OBTAINED FROM THE INDIVIDUAL UTILITIES BEFORE PROCEEDING WITH CONSTRUCTION.

B.M.
ELEV.

NO.	REVISIONS	DATE	BY
0	ISSUED FOR TENDER	18/02/09	JNC

DESIGNED BY	JAT
DRAWN BY	PMW
CHECKED BY	JNC
APPROVED BY	JNC
HOR. SCALE	1:1000
VERTICAL	—

DATE

DILLON CONSULTING

RELEASED FOR CONSTRUCTION

DATE

ENGINEER'S SEAL
PROVINCE OF MANITOBA
J.N. CRANG
REGISTERED PROFESSIONAL ENGINEER

CONSULTANT PROJECT NUMBER
17-5932

Winnipeg

THE CITY OF WINNIPEG
PUBLIC WORKS DEPARTMENT

FERMOR AVENUE BRIDGE OVER SEINE RIVER
BRIDGE REHABILITATION, PEDESTRIAN-CYCLIST UNDERPASS STRUCTURE AND ROADWORKS FROM ST. ANNE'S ROAD TO ARCHIBALD STREET

CITY DRAWING NUMBER
P-3489-2017-GE-012

SHEET 012 OF 021

CONSULTANT DRAWING NUMBER
GE-012

CONSTRUCTION STAGING - STAGE 1B (1 OF 2)

G:\CAD\175932\Drawings\Roadworks\Contract\175932-CON-CT-STAGE-1B.dwg