NOTE:
INSTALL RAIL PARALLEL TO ROADWAY EDGE LINE. WHEN FLARE IS REQUIRED BY DESIGN ENGINEER, A 25:1 FLARE RATE, OR FLATTER, OVER THE LENGTH OF SYSTEM IS ALLOWABLE.

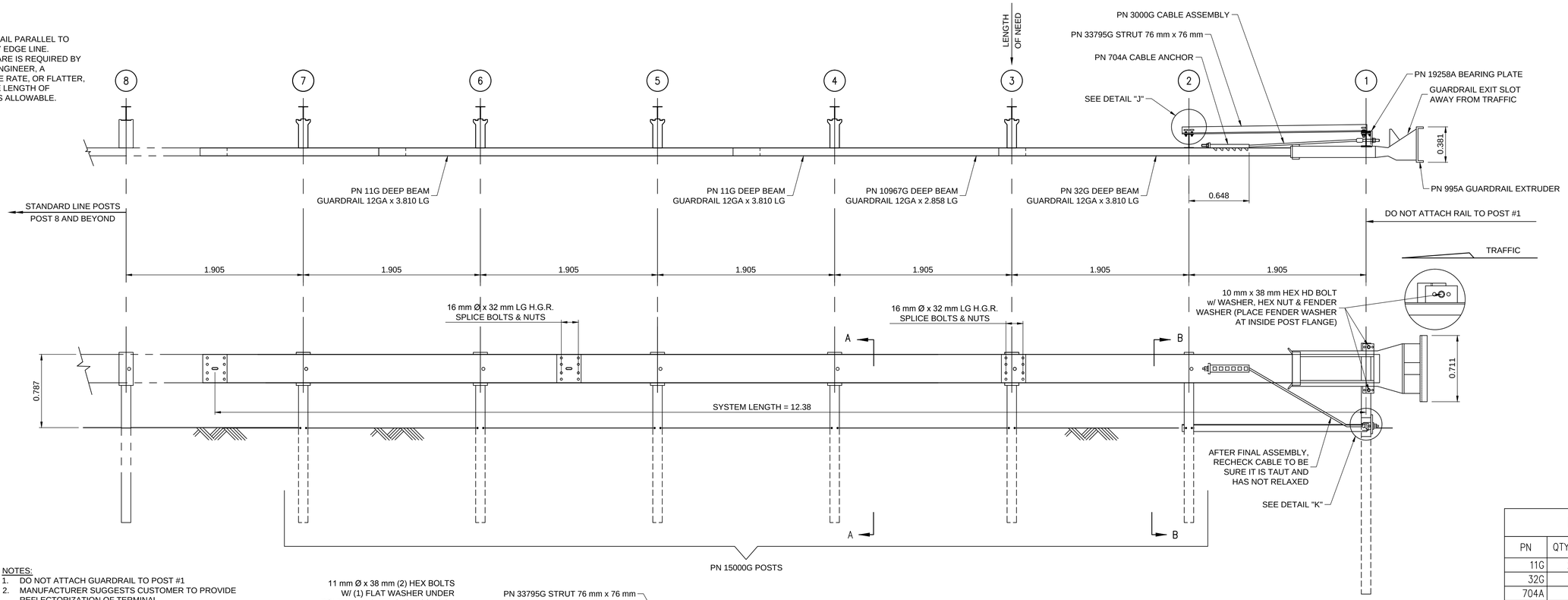

NOTES:
1. DO NOT ATTACH GUARDRAIL TO POST #1
2. MANUFACTURER SUGGESTS CUSTOMER TO PROVIDE REFLECTORIZATION OF TERMINAL
3. 305 mm DEEP WOOD OFFSET BLOCKS (ROUTED) ARE ACCEPTABLE ALTERNATES

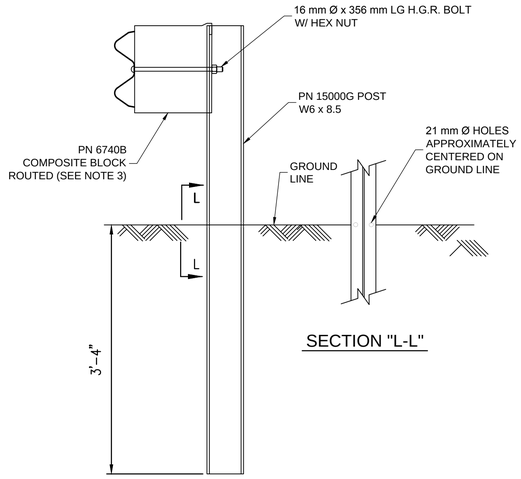

SECTION "L-L"

SECTION "A-A"
TYPICAL @ POSTS #3 TO #8)

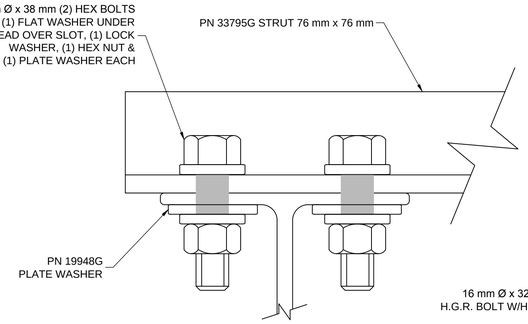

DETAIL 'J'

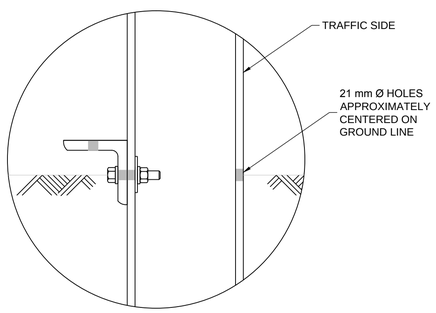

DETAIL "H"
POST #2

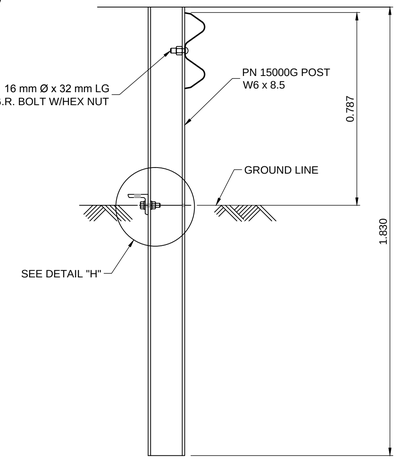

SECTION "B-B"
POST #2

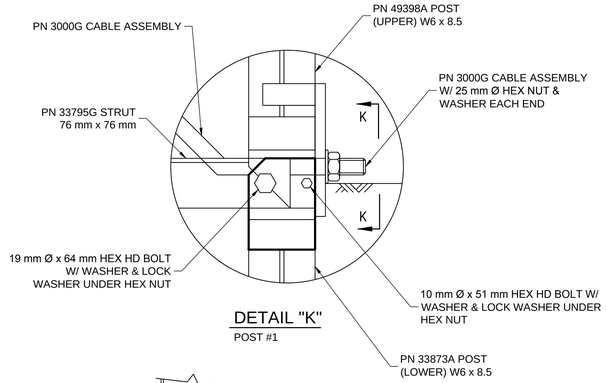

DETAIL "K"
POST #1

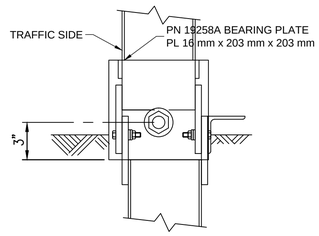

SECTION "K-K"

BILL OF MATERIAL

PN	QTY	DESCRIPTION
11G	2	12/12'6/3'1.5/S (GUARDRAIL)
32G	1	12/12'-6/6'3/S ANC (GUARDRAIL)
704A	1	CABLE ANCHOR BRACKET
995A	1	ET-PLUS EXTRUDER
3000G	1	CABLE 3/4 x 6'6
3340G	39	5/8" HEX NUT
3360G	33	5/8"ø x 1 1/4" SPLICE BOLT
3540G	6	5/8"ø x 14" POST BOLT
3701G	2	3/4" FLAT WASHER
3704G	2	3/4" HEX NUT
3717G	2	3/4"ø x 2 1/2" HEX HD BOLT(A-325)
3900G	2	1" FLAT WASHER
3910G	2	1" HEX NUT
4254G	4	3/8" FLAT WASHER
4255G	2	3/8" FENDER WASHER (1 1/2 OD)
4258G	2	3/8" LOCKWASHER
4261G	2	3/8"ø x 1 1/2" HEX HD BOLT(GR-5)
4389G	2	7/16" FLAT WASHER
4390G	2	7/16"ø x 1 1/2" HEX HD BOLT
4393G	2	7/16" LOCK WASHER
4396G	2	7/16" HEX NUT
6740B	6	COMPOSITE BLOCK x 14 LG
4699G	2	3/4" LOCK WASHER
6321G	2	3/8"ø x 2" HEX HD BOLT(GR-5)
6405G	4	3/8" HEX NUT
10967G	1	12/9'4.5/3'1.5/S (GUARDRAIL)
15000G	7	POST SYT #2-#8
19258A	1	5/8" x 8" x 8" BEARING PLATE
19948G	2	PLATE WASHER
33795G	1	ANGLE STRUT (ET/SYTP/HBA)
33873A	1	POST ET PLUS HBA #1 BOTTOM
49398A	1	POST ET PLUS HBA #1 TOP

APEGM
Certificate of Authorization
Dillon Consulting Limited (MB)
No. 1789 Date: 18/02/09

EXISTING	LEGEND-PLAN	PROPOSED	EXISTING	LEGEND-PLAN	PROPOSED	EXISTING	LEGEND-PROFILE	PROPOSED
150 WM	WATERMAIN	150 WM		CONCRETE		150 WM	WATERMAIN	150 WM
	HYDRANT			ASPHALT		300 LDS	LAND DRAINAGE SEWER	300 LDS
	VALVE			PLANING		250 WWS	WASTE WATER SEWER	250 WWS
	MANHOLE			SIDEWALK			HYDRANT	
	CATCH BASIN			PAVING STONES			VALVE	
	CURB INLET			PARTIAL DEPTH REPAIR			℄ PROFILE	
300 LDS	LAND DRAINAGE SEWER	300 LDS		PROPERTY LINE			NORTH/WEST GUTTER	
250 WWS	WASTE WATER SEWER	250 WWS		DRAINAGE ARROW			SOUTH/EAST GUTTER	
HYDRO	HYDRO	HYDRO		CURB RAMP (SD-229C)			NORTH/WEST DITCH	
MTS	M.T.S.	MTS		DETECTABLE WARNING SURFACE TILE (SD-229AA)			SOUTH/EAST DITCH	
100 GAS	GAS	100 GAS						

UNDERGROUND STRUCTURES

SUPV. U/G STRUCTURES DATE

LOCATION OF UNDERGROUND STRUCTURES AS SHOWN ARE BASED ON THE BEST INFORMATION AVAILABLE BUT NO GUARANTEE IS GIVEN THAT ALL EXISTING UTILITIES ARE SHOWN OR THAT THE GIVEN LOCATIONS ARE EXACT. CONFIRMATION OF EXISTENCE AND EXACT LOCATION OF ALL SERVICES MUST BE OBTAINED FROM THE INDIVIDUAL UTILITIES BEFORE PROCEEDING WITH CONSTRUCTION.

B.M. ELEV. SEE SHEET CT-001 FOR CONTROL POINT INFORMATION

NO.	REVISIONS	DATE	BY
0	ISSUED FOR TENDER	18/02/09	JNC

DESIGNED BY –
DRAWN BY –
CHECKED BY –
APPROVED BY –
HOR. SCALE AS NOTED
VERTICAL AS NOTED
DATE

DILLON CONSULTING

RELEASED FOR CONSTRUCTION
DATE

ENGINEER'S SEAL
PROVINCE OF MANITOBA
J.N. CRANG
REGISTERED PROFESSIONAL ENGINEER

CONSULTANT PROJECT NUMBER
17-5932

Winnipeg
THE CITY OF WINNIPEG
PUBLIC WORKS DEPARTMENT

FERMOR AVENUE BRIDGE OVER SEINE RIVER
BRIDGE REHABILITATION, PEDESTRIAN-CYCLIST UNDERPASS STRUCTURE AND ROADWORKS FROM ST. ANNE'S ROAD TO ARCHIBALD STREET

ET-31 GUARDRAIL DETAILS

CITY DRAWING NUMBER P-3489-2017-CT-067
SHEET 067 OF 067
CONSULTANT DRAWING NUMBER CT-067

G:\CAD\17593\2\Drawings\Roadworks\Contract\175932-CON-CT-ET-31-DETAILS.dwg