NOTES:

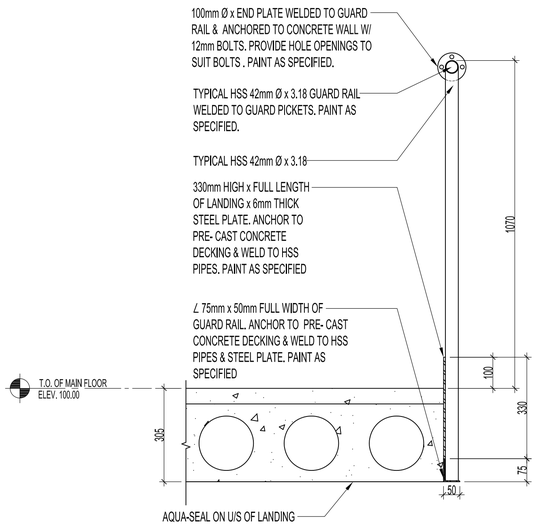

1 A3.0 A3.1 DETAIL -GUARD RAILING
SCALE: 1:10

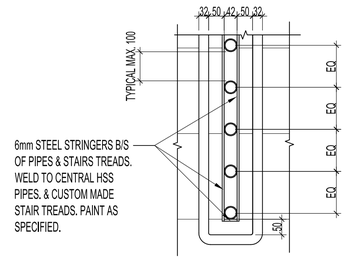

2 A3.0 A3.1 DETAIL
SCALE: 1:10

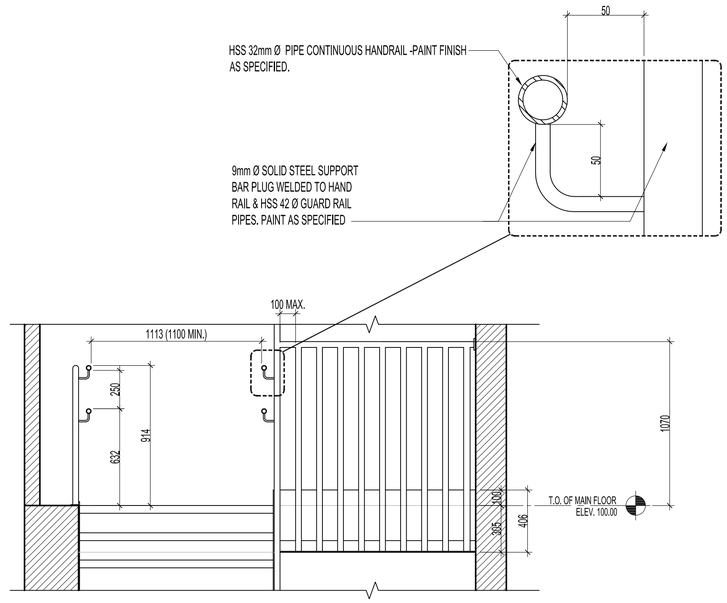

3 A1.2 A1.4 RAILING SECTION
SCALE: 1:20

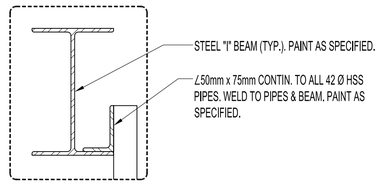

4 A3.0 A3.1 STAIR B05 & 110 SECTION
SCALE: 1:5

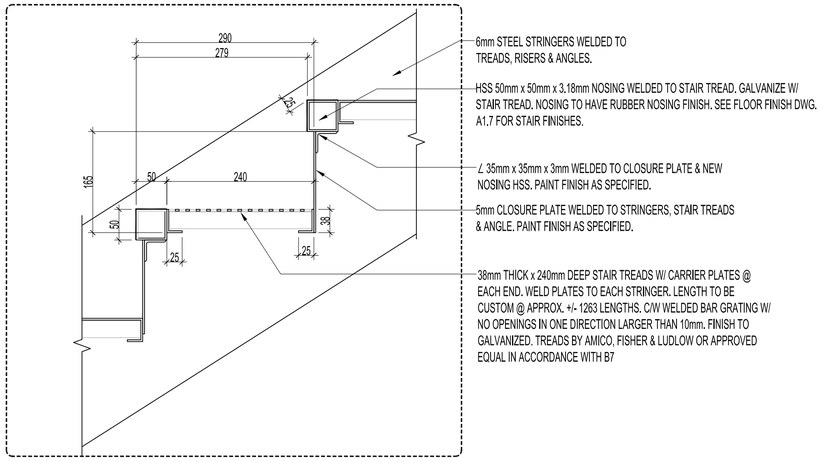

5 A3.0 A3.1 STAIR TREADS & RISERS
SCALE: 1:5

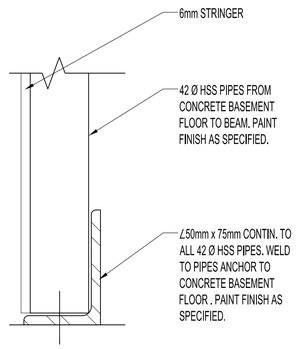

6 A3.0 A3.1 STAIR PIPE DETAILS
SCALE: 1:5

No.	REVISION/DESCRIPTION	BY	DATE
0	ISSUED FOR CONSTRUCTION	MMK	MAR 17, 2017

SEAL

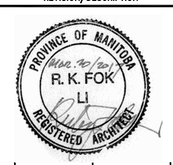

DRAWN	CHECKED	DESIGNED	APPROVED
MMK			
DATE 2016.08.30	USER APPROVAL		

Winnipeg

THE CITY OF WINNIPEG
PLANNING, PROPERTY AND DEVELOPMENT DEPARTMENT
MUNICIPAL ACCOMMODATIONS DIVISION
3–65 GARRY STREET, R3C 4K4

PROJECT
BRADY ROAD LANDFILL
ADMINISTRATION BUILDING DEVELOPMENT FOR BRADY LANDFILL
1777 BRADY ROAD

SHEET TITLE
STAIR DETAILS

SCALE	PROJECT No:	SHEET No:
AS SHOWN	2015-037	A3.1

DRAWING SHEET SIZE: A1 (841mm x 594mm) PLOT 1:1

ADDRESS: 1777 BRADY ROAD PROJECT No: 2015-037 SHEET TITLE: DATE: FILE NAME: 2015037V0.dwg