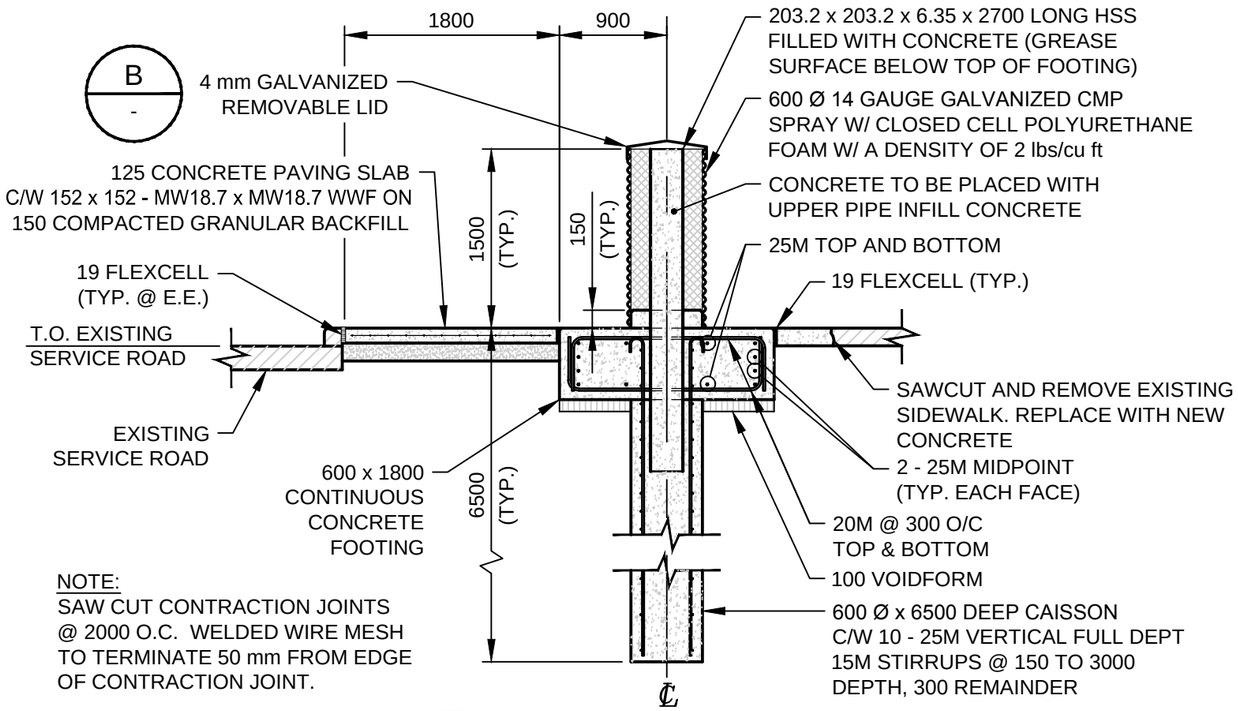

NOTE:
SAW CUT CONTRACTION JOINTS @ 2000 O.C. WELDED WIRE MESH TO TERMINATE 50 mm FROM EDGE OF CONTRACTION JOINT.

1 / D13673 SECTION 1:50
TYPICAL BOLLARD DETAIL

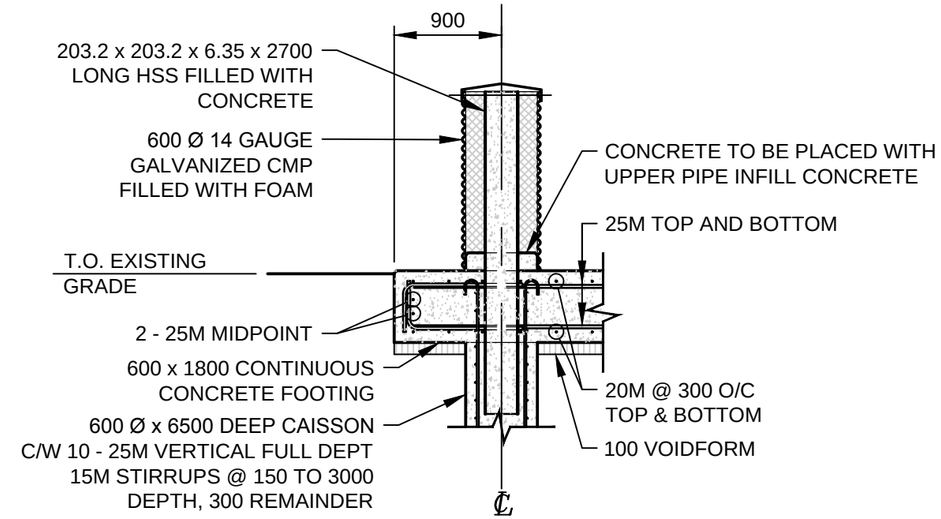

2 / D13673 SECTION 1:50
TYPICAL AT END

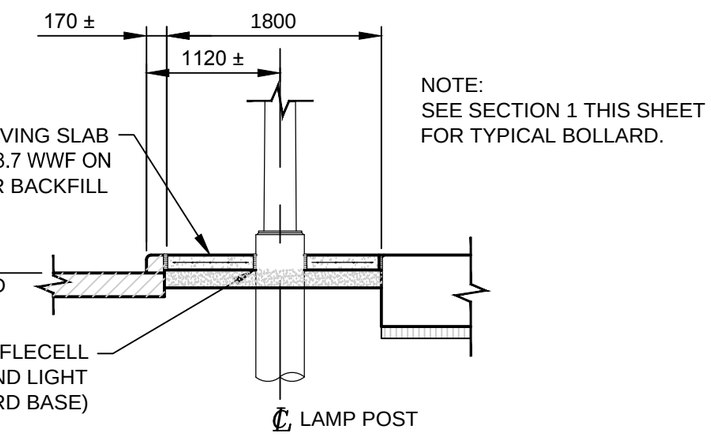

NOTE:
SEE SECTION 1 THIS SHEET FOR TYPICAL BOLLARD.

3 / D13673 SECTION 1:50
TYPICAL AT LAMP POST

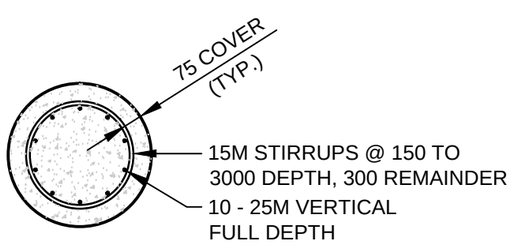

A / - DETAIL 1:25
TYPICAL PILE

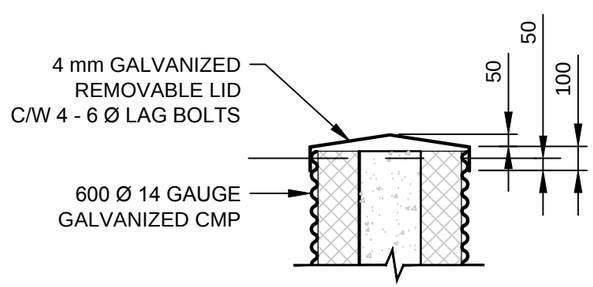

B / - DETAIL 1:25
TYPICAL REMOVABLE LID

LOCATION APPROVED
UNDERGROUND STRUCTURES

SUPV. U/G STRUCTURES COMMITTEE — DATE

NOTE:
LOCATION OF UNDERGROUND STRUCTURES AS SHOWN ARE BASED ON THE BEST INFORMATION AVAILABLE BUT NO GUARANTEE IS GIVEN THAT ALL EXISTING UTILITIES ARE SHOWN OR THAT THE GIVEN LOCATIONS ARE EXACT. CONFIRMATION OF EXISTENCE AND EXACT LOCATION OF ALL SERVICES MUST BE OBTAINED FROM THE INDIVIDUAL UTILITIES BEFORE PROCEEDING WITH CONSTRUCTION.

B.M.
ELEV.
COSTRUCTION COMPLETION DATE: YYYY MM DD

NO.	REVISIONS	DATE	BY

KEMP ENGINEERING INC.

DESIGNED BY	FK	CHECKED BY	FK
DRAWN BY	TK	APPROVED BY	FK
SCALE: HORIZONTAL / VERTICAL	AS NOTED	RELEASED FOR CONSTRUCTION	
DATE	2015 05 07	DATE	

PLOT DATE: 2015 05 07

ENGINEER'S SEAL
PROVINCE OF MANITOBA — ORIGINAL SIGNED BY F. A. KEMP FEB. 27/2015 — REGISTERED ENGINEER

CONSULTANT DRAWING NUMBER
–

BID OPPORTUNITY: 193-2015
CONTRACT NUMBER: 1

Winnipeg

THE CITY OF WINNIPEG
WATER AND WASTE DEPARTMENT
ENGINEERING DIVISION

MacLEAN PUMPING STATION
INSTALLATION OF BOLLARDS SHEET 2 OF 2

SECTIONS AND DETAILS

SHEET 2 OF 2
CITY DRAWING NUMBER
D13674

FILE PATH: C:\Users\404350k\Documents\MacLeans\
FILE NAME: D13674.dwg