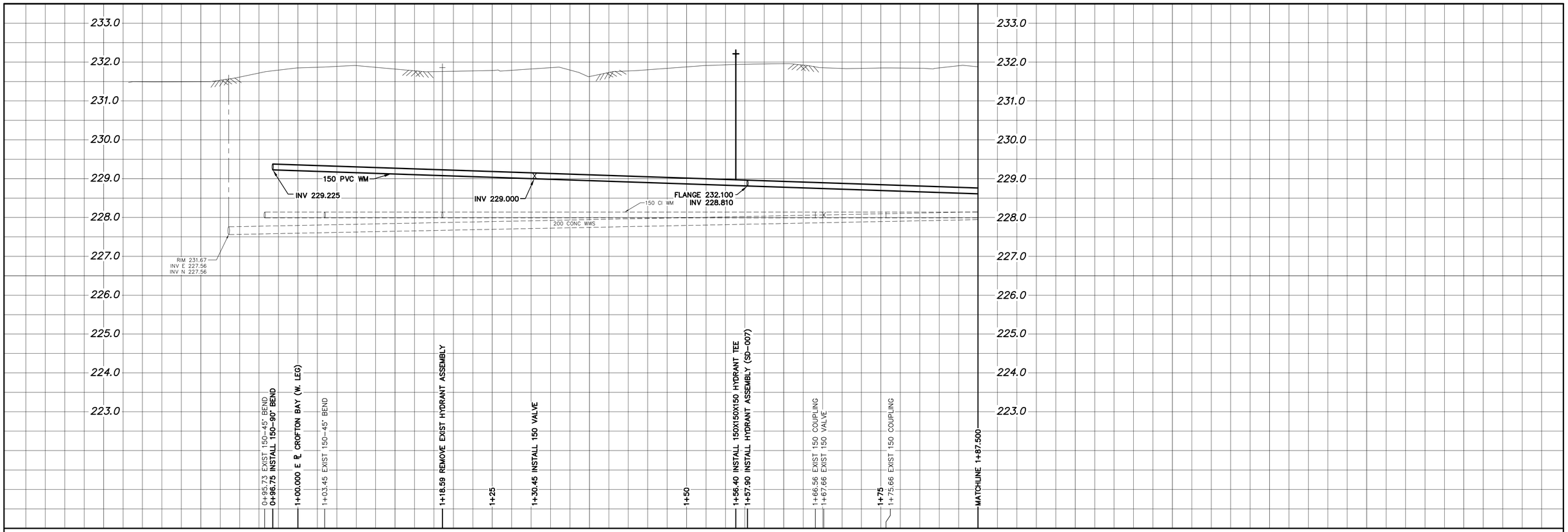

NOTE: CHAINAGES SHOWN ARE ALONG S. ℄ OF CROFTON BAY (S–LEG)

CROFTON BAY (S–LEG)

CAUTION: GAS ON N SIDE

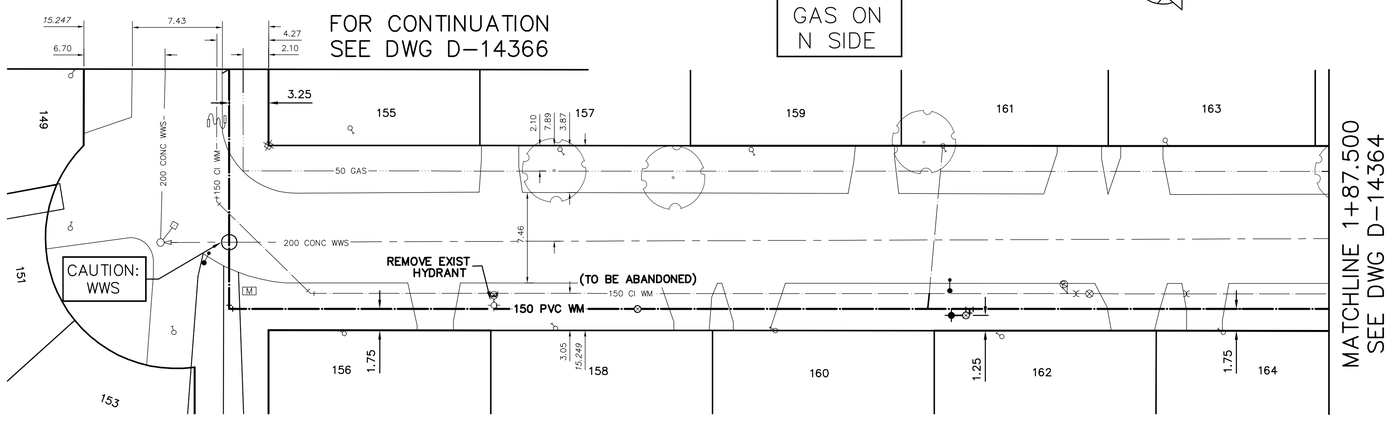

WATER SERVICE INFORMATION

ADDRESS	SIZE (mm) MATERIAL (STREET)	SIZE (mm) MATERIAL (PROP.)	SHORT & LONG MEASUREMENT	CORP. LOCATION	REMARKS
151 CROFTON BAY	20	20	1.53 SNL HSE	–	RECONNECT SERVICE
RESIDENTIAL	CU	CU	16.32 WEL CROFTON BAY		–
153 CROFTON BAY	20	20	2.88 WEL HSE	–	RECONNECT SERVICE
RESIDENTIAL	CU	CU	7.83 EEL CROFTON BAY		–
155 CROFTON BAY	20	20	2.85 EWL HSE	–	RECONNECT SERVICE
RESIDENTIAL	CU	CU	6.71 EEL CROFTON BAY		–
156 CROFTON BAY	20	20	2.64 EWL HSE	–	RECONNECT SERVICE
RESIDENTIAL	CU	CU	6.23 EEL CROFTON BAY		–
157 CROFTON BAY	25	20	3.55 EWL HSE	–	RECONNECT SERVICE
RESIDENTIAL	CU	CU	24.03 EEL CROFTON BAY		–
158 CROFTON BAY	–	20	3.82 EWL HSE	–	RECONNECT SERVICE
RESIDENTIAL	–	CU	23.67 EEL CROFTON BAY		–
159 CROFTON BAY	20	20	3.41 EWL HSE	–	RECONNECT SERVICE
RESIDENTIAL	CU	CU	39.79 EEL CROFTON BAY		–
160 CROFTON BAY	20	20	0.29 EWL HSE	–	RECONNECT SERVICE
RESIDENTIAL	CU	CU	41.77 EEL CROFTON BAY		–
161 CROFTON BAY	20	20	1.68 EWL HSE	–	RECONNECT SERVICE
RESIDENTIAL	CU	CU	55.59 EEL CROFTON BAY		–
162 CROFTON BAY	25	20	3.66 EWL HSE	–	RECONNECT SERVICE
RESIDENTIAL	CU	CU	60.45 EEL CROFTON BAY		–
163 CROFTON BAY	–	20	3.66 EWL HSE	–	RECONNECT SERVICE
RESIDENTIAL	–	CU	73.90 EEL CROFTON BAY		–
164 CROFTON BAY	20	20	0.15 EWL HSE	–	RECONNECT SERVICE
RESIDENTIAL	CU	CU	78.69 EEL CROFTON BAY		–

*SERVICES TO BE RENEWED TO ℄. ALL OTHERS TO BE RECONNECTED

FOR INDEX SEE D–14362

NOTE: ALL VALVES TO BE INSTALLED CLOCKWISE TO CLOSE

METRIC
WHOLE NUMBERS INDICATE MILLIMETRES
DECIMALIZED NUMBERS INDICATE METRES

0.0 5.0 10.0 15.0 20.0 25.0

WARNING

IF POWER EQUIPMENT OR EXPLOSIVES ARE TO BE USED FOR EXCAVATION ON THIS PROJECT THE CONTRACTOR MUST:

1) NOTIFY THE GAS COMPANY OF THE PROPOSED LOCATION OF EXCAVATION.

2) TAKE PRECAUTION TO AVOID DAMAGE TO GAS COMPANY INSTALLATIONS.

SEE PROVINCIAL REGULATION 210/72 FOR DETAILS

LOCATION APPROVED
UNDERGROUND STRUCTURES

SUPV. U/G STRUCTURES COMMITTEE DATE

NOTE:

LOCATION OF UNDERGROUND STRUCTURES AS SHOWN ARE BASED ON THE BEST INFORMATION AVAILABLE BUT NO GUARANTEE IS GIVEN THAT ALL EXISTING UTILITIES ARE SHOWN OR THAT THE GIVEN LOCATIONS ARE EXACT. CONFIRMATION OF EXISTENCE AND EXACT LOCATION OF ALL SERVICES MUST BE OBTAINED FROM THE INDIVIDUAL UTILITIES BEFORE PROCEEDING WITH CONSTRUCTION.

B.M.
ELEV.

NO.	REVISIONS	DATE	BY

DESIGNED BY	NC	CHECKED BY	SC
DRAWN BY	RS/RJ	APPROVED BY	KZ
SCALE: HORIZONTAL	1:250	RELEASED FOR CONSTRUCTION	KAS ZUREK
VERTICAL	1:50		
DATE	2016 04 29	DATE	2016 04 29

PLOT DATE: 2016 04 29

ENGINEER'S SEAL

ORIGINAL SIGNED BY N.M. CONTI 16/04/29

CONSULTANT DRAWING NUMBER

–

BID OPPORTUNITY: 372–2016
CONTRACT NUMBER: 2

Winnipeg

THE CITY OF WINNIPEG
WATER AND WASTE DEPARTMENT
ENGINEERING DIVISION

2016 WATER MAIN RENEWALS
CONTRACT 2

CROFTON BAY (S–LEG)

185 W OF PULBERRY STREET TO
294 W OF PULBERRY STREET

SHEET 4 OF 16

CITY DRAWING NUMBER

D–14365

FILE PATH: R:\DRAWINGS\WATER\RENEWAL\2016 RENEWALS\Contract 2\Construction Dwg\
FILE NAME: CROFTON BAY.dwg