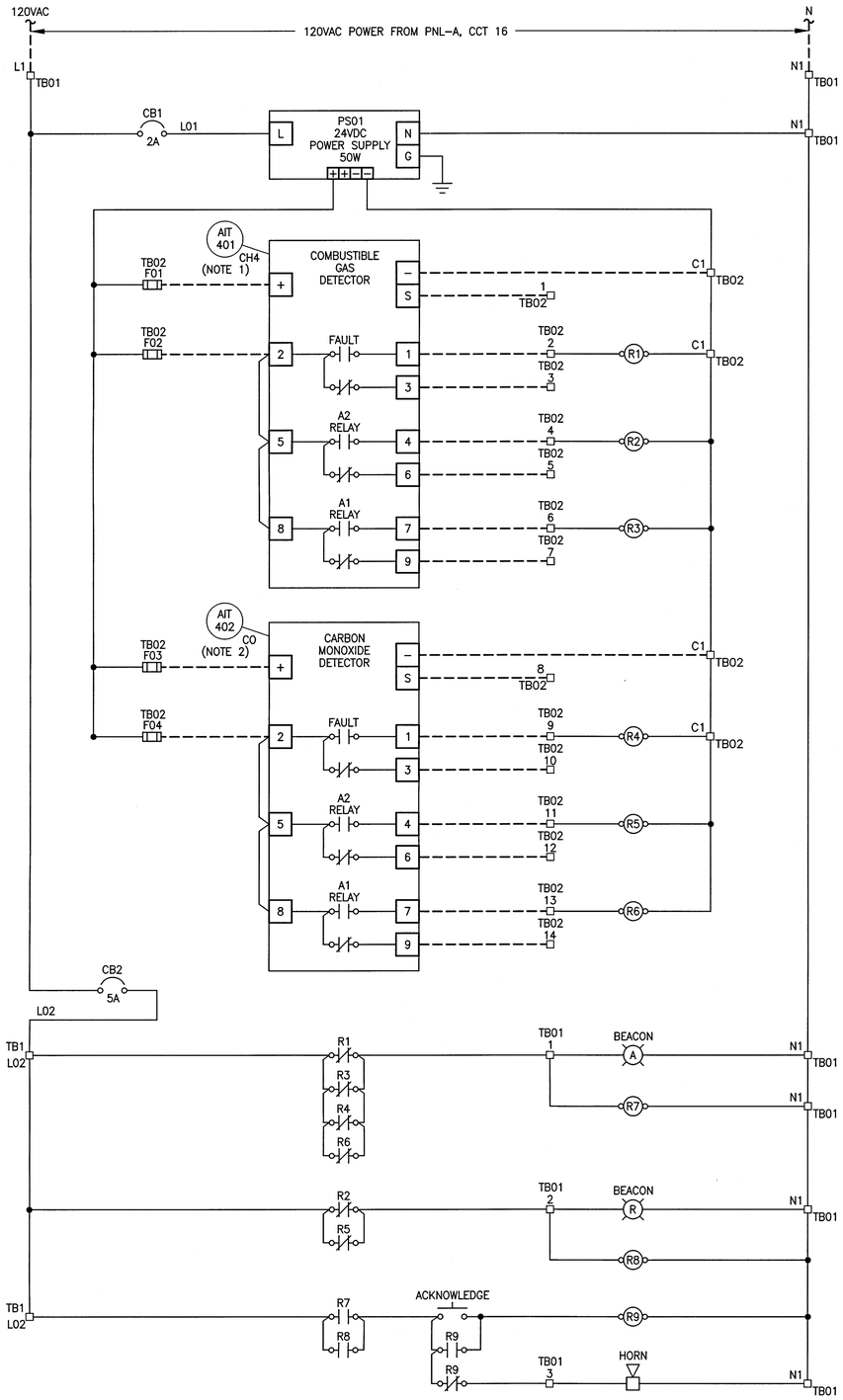

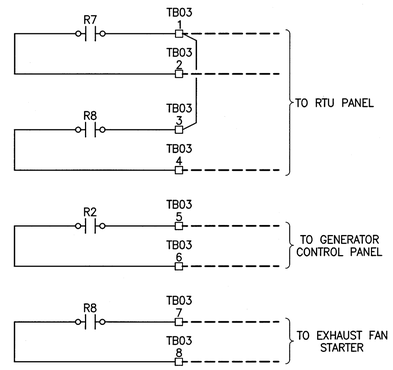

NOTES:

1. ALARM RELAYS SHALL BE ENERGIZED UNDER NORMAL CONDITIONS AND RESETS (DE-ENERGIZED) ON RISING GAS CONCENTRATION AND ALARM HYSTERESIS OF 6% FULL SCALE DEFLECTION (FSD). RELAY A1 SHALL BE NON-LATCHING, NON-ACKNOWLEDGEABLE WITH A SETPOINT OF 10% LEL. RELAY A2 SHALL BE LATCHING, NON-ACKNOWLEDGEABLE WITH A SETPOINT OF 20% LEL.
2. ALARM RELAYS SHALL BE ENERGIZED UNDER NORMAL CONDITIONS AND RESETS (DE-ENERGIZED) ON RISING GAS CONCENTRATION AND ALARM HYSTERESIS OF 6% FULL SCALE DEFLECTION (FSD). RELAY A1 SHALL BE NON-LATCHING, NON-ACKNOWLEDGEABLE WITH A SETPOINT OF 50 PPM CO. RELAY A2 SHALL BE LATCHING, NON-ACKNOWLEDGEABLE WITH A SETPOINT OF 200 PPM CO.

LEGEND

- STARTER TERMINALS
- FUSE
- FIELD WIRING
- MANUFACTURER WIRING
- RELAY
- NORMALLY OPEN
- NORMALLY CLOSED

A1 SIZE - 594mm x 841mm

FileName: P:\Projects\2016\16-0107-025\Dwg\Elec\1-0153F-E0004-001.dwg - Tab: E30 Plotted By: dderoche 01/20/2017 [Fri 11:51am]

APEGM
Certificate of Authorization
KGS Group
No. 245

B.M. –
ELEV. –

NO.	REVISIONS	DATE	DESIGN	CHECK
00	ISSUED FOR CONSTRUCTION	2017/01/20	JB	DJW

KGS GROUP CONSULTING ENGINEERS

DESIGNED BY: J. BOUCHARD
CHECKED BY: DJW
DRAWN BY: J. DELEON
APPROVED BY: J. Bouchard
SCALE: AS NOTED
ISSUED FOR CONSTRUCTION
BY:
DATE: 2016/12/08
DATE:
CONSULTANT NO.: 16-0107-025_E04

ENGINEER'S SEAL
PROVINCE OF MANITOBA
J. BOUCHARD
Member
20560
REGISTERED PROFESSIONAL ENGINEER
2017/01/20

Winnipeg
THE CITY OF WINNIPEG
WATER AND WASTE DEPARTMENT

LARCHDALE FLOOD PUMP STATION
GENERATOR REPLACEMENT PROJECT
GAS DETECTION CONTROL
PANEL SCHEMATIC

CITY DRAWING NUMBER	SHEET	REV.	SIZE
1-0153F-E0004-001		00	A1

PLOT DATE: Jan 20, 2017 - 11:51am
FILE NAME: 1-0153F-E0004-001.dwg